S9407-AB-HBK-010

Revision 2

HANDBOOK
OF
SHIPBOARD ELECTROMAGNETIC SHIELDING PRACTICES

This document supersedes S9407-AB-HBK-010, Revision 1
date published 30 September 1989

APPROVED FOR PUBLIC RELEASE; DISTRIBUTION IS UNLIMITED

Published by Direction of Commander, Naval Sea Systems Command

30 DECEMBER 1996
CHANGE 2: 22 FEBRUARY 2010

NOTICE OF CHANGE

S9407-AB-HBK-010, Revision 2
CHANGE 2
22 FEBRUARY 2010

HANDBOOK OF SHIPBOARD ELECTROMAGNETIC SHIELDING PRACTICES

TO ALL HOLDERS OF S9407-AB-HBK-010 REVISION 2, CHANGE 1:

1. THE FOLLOWING PAGES OF S9407-AB-HBK-010 REVISION 2, CHANGE 1 HAVE BEEN REVISED AND SUPERSEDE THE PAGES LISTED:

NEW PAGE	DATE	SUPERSEDED PAGE	DATE
Title	22 February 2010	Title	1 March 1999
A	22 February 2010	A	1 March 1999
e/f	22 February 2010	-	-
i/ii	22 February 2010	i/ii	1 March 1999
1-7	22 February 2010	1-7	30 December 1996
1-8	22 February 2010	1-8	30 December 1996
1-9	22 February 2010	1-9	30 December 1996
1-10	22 February 2010	1-10	30 December 1996
3-9	30 December 1996	3-9	REPRINTED WITHOUT CHANGE
3-10	22 February 2010	3-10	30 December 1996
C-1	22 February 2010	C-1	1 March 1999
C-2	22 February 2010	C-2	1 March 1999
C-3	22 February 2010	C-3	1 March 1999
C-4	30 December 1996	C-4	REPRINTED WITHOUT CHANGE
D-1	22 February 2010	D-1	1 March 1999
D-2	22 February 2010	D-2	1 March 1999
D-3	30 December 1996	D-3	REPRINTED WITHOUT CHANGE
D-4	22 February 2010	D-4	30 December 1996

2. It should also be noted that the header on some pages of S9407-AB-HBK-010 Revision 2 remain incorrectly listed as S9408-AB-HBK-010, Rev. 2. The header of these pages should be redlined to indicate the correct header of S9407-AB-HBK-010, Rev. 2. The pages that require this change are 3-3, 3-4, 5-1 through 5-18, 5-21, 5-22, 5-25 through 5-36, 6-3 through 6-8, 6-13, 6-14, 6-17 through 6-34, 6-37, and 6-38.

3. It should also be noted that OPNAVIST 5100.23D of January 1999 restricts the use of material containing cadmium. While the use of material containing cadmium is typically allowed via a waiver request when no processing of this material (i.e. welding, grinding, soldering) which results in a release to the shipboard environment occurs, it is still advisable to reduce the amount of this material shipboard. Throughout this Handbook the use of cadmium plated materials is listed, in all instances the use of cadmium-free equivalent material can be used if desired.

4. RETAIN THIS NOTICE AND INSERT BEFORE TABLE OF CONTENTS.

5. Holders of S9407-AB-HBK-010 Revision 2, Change 1 will verify that page changes and additions indicated above have been entered. This notice page will be retained as a checksheet. This issuance, together with appended pages, is a separate publication. Each notice is to be retained by stocking points until the handbook is completely revised or canceled.

LIST OF EFFECTIVE PAGES

Dates of issue for original and changed pages are:

Original (Revision 2)	30 December 96
Change 1	1 March 99
Change 2	22 February 10

TOTAL NUMBER OF PAGES IN THIS PUBLICATION IS 256 CONSISTING OF THE FOLLOWING:

Page No.	*Change No.	Page No.	*Change No.
Title Page	2	6-i and 6-ii	1
A	2	6-1	1
a/b	0	6-2 through 6-9	0
c/d	1	6-10	1
e/f	2	6-11	0
i/ii	2	6-12	1
1-i/1-ii	0	6-13 through 6-15	0
1-1 through 1-6	0	6-16	1
1-7 through 1-10	2	6-17 through 6-35	0
2-i/2-ii	1	6-36	1
2-1	0	6-37and 6-38	0
2-2	1	6-39/6-40	1
2-3 and 2-4	0	7-i and 7-ii	1
2-5	1	7-1 and 7-2	0
2-6	0	7-3	1
2-7	1	7-4 through 7-21	0
2-8	0	7-22 through 7-26	1
3-i/3-ii	0	7-27 and 7-28	0
3-1	1	A-1/A-ii	0
3-2 through 3-6	0	A-1 through A-6	0
3-7 and 3-8	1	B-i/B-ii	0
3-9	0	B-1 through B-6	0
3-10	2	C-i/C-ii	0
4-i and 4-ii	1	C-1 through C-3	2
4-1 through 4-9	0	C-4 through C-8	0
4-10 though 4-12	1	D-i and D-ii	1
4-13	0	D-iii and D-iv	0
4-14	1	D-1 and D-2	2
4-15	0	D-3	0
4-16	1	D-4	2
4-17	0	D-5 through D-7	0
4-18	1	D-8	1
4-19 and 4-20	0	D-9	0
4-21	1	D-10	1
4-22	0	D-11	0
4-23	1	D-12	1
4-24 through 4-26	0	D-13 through D-14	0
5-i and 5-ii	0	D-15 through D-18	1
5-1 through 5-18	0	E-i/E-ii	0
5-19 and 5-20	1	E-1 through E-19/E-20	0
5-21 and 5-22	0	F-1/F-ii	0
5-23	1	F-1 and F-2	0
5-24 through 5-36	0	F-3/F-4	1

*Zero in this column indicates an original page.

DEPARTMENT OF THE NAVY
NAVAL SEA SYSTEMS COMMAND
2531 JEFFERSON DAVIS HWY
ARLINGTON VA 22242-5160

IN REPLY REFER TO

9407
Ser 03K2/034
25 Mar 97

From: Commander, Naval Sea Systems Command

Subj: PROMULGATION/AUTHORIZATION OF HANDBOOK OF SHIPBOARD ELECTROMAGNETIC SHIELDING PRACTICES S9407-AB-HBK-010, REV 2 OF 30 DECEMBER 1996

Encl: (1) S9407-AB-HBK-010, Revision of 30 Dec 1996

1. The purpose of this handbook is to specify requirements and to provide technical guidance in the design and installation of electrical cables, cableways, and shielding associated with electrical and electronic systems installed aboard submarines, in below decks areas of surface ships, and in many shore-based installations. Proper use of this technical guidance will enhance electromagnetic compatibility (EMC) of these systems.

2. Enclosure (1) updates the information contained in S9407-AB-HBK-010, Revision 1 of 30 September 1989. This revision provides guidance for routing cables while in the presence of direct current (DC) generating coils. It also contains logistic and reference updates and corrections from the previous revision.

3. Enclosure (1) herein supersedes S9407-AB-HBK-010 of 1 October 1982, and 0967-LP-283-5010 of 1 December 1976. Previous issues of these handbooks should be retained due to their possible application to earlier ship construction or SHIPALT installations. Recommendations for additions, changes, or corrections should be directed to: Commander, Naval Sea Systems Command, SEA 03K23, 2531 Jefferson Davis Highway, Arlington, Virginia, 22242-5160.

4. The distribution list is located at the back of enclosure (1). Requests for copies or changes to the distribution list should be directed to: Commander, Naval Undersea Warfare Center Division Newport, 1176 Howell Street, Newport, Rhode Island, 02841-1708, ATTN: EMC Branch, Code 3431 or telephone (401) 841-6892x35543, DSN 948-6892x35543.

DONALD R. CEBULSKI
By direction

Reprinted without change
a/b

DEPARTMENT OF THE NAVY
NAVAL SEA SYSTEMS COMMAND
2531 JEFFERSON DAVIS HWY
ARLINGTON VA 22242-5160

IN REPLY REFER TO
9407
Ser 05/9073
11 Jun 99

From: Commander, Naval Sea Systems Command

Subj: PROMULGATION/AUTHORIZATION OF CHANGE 1 TO HANDBOOK OF SHIPBOARD ELECTROMAGNETIC SHIELDING PRACTICES S9407-AB-HBK-010, REVISION 2 OF 30 DECEMBER 1996

Encl: (1) Change 1 to S9407-AB-HBK-010, Rev 2 of 30 Dec 96

1. The purpose of The Handbook of Shipboard Electromagnetic Shielding Practices is to specify requirements and provide technical guidance for the design and installation of electrical cables, cableways, and shielding associated with electrical and electronic systems installed onboard submarines, in below decks areas of surface ships, and in many shore-based installations. Proper use of the technical guidance provided in this handbook will enhance electromagnetic compatibility (EMC) of these systems.

2. Enclosure (1) updates and supercedes the information contained in associated pages of S9407-AB-HBK-010, Rev 2 of 30 Dec 96. This change reflects the qualification of flexible shielding conduit for an additional vendor, and adds that vendor to Table C-2, Flexible Shielding Conduit. This change also corrects several typographical errors.

3. Recommendations for additions, changes, or corrections to S9407-AB-HBK-010 should be directed to: Commander, Naval Sea Systems Command, ATTN: SEA 05H3, 2531 Jefferson Davis Highway, Arlington, Virginia 22242-5160.

4. The distribution list following Appendix F, provides previous distribution of this document. Requests for copies or changes to the distribution list should be directed to: Commander, Naval Undersea Warfare Center Division Newport, ATTN: EMC Branch/Code 3431, 1176 Howell Street, Newport, Rhode Island 02841-1708, commercial telephone (401) 832-5540, DSN 920-5540.

S. K. ELLISON
By direction

c/d

DEPARTMENT OF THE NAVY
NAVAL SEA SYSTEMS COMMAND
1333 ISAAC HULL AVE SE
WASHINGTON NAVY YARD DC 20376-0001

IN REPLY TO:

2450
Ser 05H/ 016
18 Feb 10

From: Director, Human Systems Integration and Warfare Systems Engineering (SEA 05H)

Subj: PROMULGATION/AUTHORIZATION OF CHANGE 2 TO HANDBOOK OF SHIPBOARD ELECTROMAGNETIC SHIELDING PRACTICES S9407-AB-HBK-010 REV 2 CH 1 DATED 22 FEB 10

Encl: (1) Change 2 to S9407-AB-HBK-010 Rev 2 Ch 1 dtd 22 Feb 10

1. The purpose of the Handbook of Shipboard Electromagnetic Shielding Practices is to specify requirements and to provide technical guidance in the design and installation of electrical cables, cableways and shielding associated with electrical and electronic systems installed onboard submarines, in below decks areas of surface ships, and in many shore-based installations. Proper use of this technical guidance will ensure electromagnetic compatibility (EMC) of these systems.

2. Enclosure (1) updates and supersedes the information contained in S9407-AB-HBK-010 Rev 2 Ch 1 of 1 Mar 99. This change updates the requirements for the insulation jacketing material used in the construction of (Type II) flexible shielding conduit. This change also provides clarification on the use of cadmium plated fittings as well as the requirements for attaching fittings to conduit. An updated vendor listing is also provided.

3. Recommendations for additions, changes or corrections should be directed to: Commander, Naval Sea Systems Command, ATTN: SEA 05H3, 1333 Isaac Hull Ave SE, STOP 5011, Washington Navy Yard, DC 20376-5011.

4. Requests for copies or changes to the distribution list should be directed to: Commander, Naval Undersea Warfare Center Division Newport, 1176 Howell Street, Newport, RI 02841-1708, Attn: Electromagnetic Environmental Effects Branch, Code 3431 or telephone DSN 432-5542 or (401) 832-5542.

Janet Glenn, for
PATRICIA S. HAMBURGER

e/f

HANDBOOK OF SHIPBOARD ELECTROMAGNETIC SHIELDING PRACTICES TABLE OF CONTENTS

TITLE PAGE	PAGE NO.
LIST OF EFFECTIVE PAGES	A
LETTER OF PROMULGATION	a/b
PROMULGATION/AUTHORIZATION OF CHANGE 1	c/d
PROMULGATION/AUTHORIZATION OF CHANGE 2	e/f
TABLE OF CONTENTS	i/ii

SECTION

1 GENERAL DESCRIPTION

2 RIGID SHIELDING REQUIREMENTS

3 FLEXIBLE SHIELDING CONDUIT REQUIREMENTS

4 GR2000 SERIES FITTINGS FOR FLEXIBLE CONDUIT (BRAZE-ON TYPE)

5 RP2000 SERIES FITTINGS FOR FLEXIBLE CONDUIT (REUSABLE TYPE)

6 CABLE AND SPACING REQUIREMENTS

7 SHIELDING ENCLOSURES, BONDING AND GROUNDING

APPENDIX

A SEPARATION AND SHIELDING REQUIREMENTS OF SECTION 5 OF NAVSEA 0967-LP-283-5010

B GUIDELINES FOR SPACING AND SHIELDING REQUIREMENTS AT AN INTERFACE

C QUALIFIED PRODUCTS LIST FOR FLEXIBLE SHIELDING CONDUIT AND FITTINGS

D SPECIFICATION FOR FLEXIBLE SHIELDING CONDUIT

E CABLE COMPARISON CHART

F GUIDELINES FOR CABLE SPACING AND SHIELDING REQUIREMENTS IN THE PRESENCE OF DC GENERATING COILS

DISTRIBUTION LIST

NOTE

A detailed table of contents is provided at the beginning of each section and appendix. An index to Appendix D is provided at the end of Appendix D

SECTION 1
GENERAL DESCRIPTION

Section 1

GENERAL DESCRIPTION

TABLE OF CONTENTS

Paragraph		Page
1.1	INTRODUCTION	1-1
1.1.1	Scope	1-1
1.2	OBJECTIVE	1-1
1.2.1	Design Philosophy on Cable Spacing and Shielding	1-2
1.3	BACKGROUND	1-2
1.3.1	Revision 2	1-3
1.3.2	Document Applicability	1-4
1.4	LIST OF REFERENCED DOCUMENTS	1-5

Section 1

GENERAL DESCRIPTION

1.1 INTRODUCTION

The purpose of this handbook is to specify requirements and to provide technical guidance in the design and installation of electrical cables, cableways and shielding associated with electrical and electronic systems installed aboard submarines, in below-decks areas of surface ships, and in many shore-based installations. Proper use of this technical guidance will ensure electromagnetic compatibility (EMC) of these systems.

This handbook is intended for use by ship designers, work planners and personnel engaged in the installation of electrical and electronic cables and equipment for new ship construction, SHIPALT installation and repair at shipyards, tenders and other activities.

1.1.1 Scope

This handbook provides information on cable spacing and shielding requirements for cables described in certain military specifications, information on flexible and rigid shielding conduit, conduit fittings and enclosures, and other pertinent information.

If it is determined, on an individual basis, that specific areas need not adhere to the guidance of this handbook, it is recommended that the wording in the controlling document (ship specification, ship alteration, etc.) indicate exceptions to these requirements. The spacing/shielding criteria presented here has a sound technical basis amenable to special case situations to suit a particular application. Special case areas of applicability should be accomplished as part of the specifications for the task and incorporated in the design. NUWC, Newport, as authorized by NAVSEA, can provide guidance in the special case process.

1.2 OBJECTIVE

The objective of this handbook is to ensure that electrical and electronic equipment will operate compatibly in the shipboard electromagnetic environment. Electromagnetic compatibility (EMC), is defined as "The condition which prevails when telecommunications (communication-electronic) equipment is collectively performing its individual designed functions in a common electromagnetic environment without causing or suffering unacceptable degradation due to electromagnetic interference to or from other equipment/systems in the same environment." EMC must, of necessity, be a major consideration during ship design and equipment installation because without EMC the warfare capability of Navy ships will be seriously reduced. The potential for electromagnetic interference (EMI) problems has increased through the years for the following reasons:

a. The increased complexity and sophistication of communications, sonar, and other electronic equipment,

b. The increased sensitivity of, and therefore, greater susceptibility to interference to detectors and receiving circuits,

c. The high power levels generated and radiated by many system components, and

d. The very high density of electronic equipment in the relatively small confined spaces in Navy ships.

e. The increasing use of commercial off-the-shelf (COTS) components and systems, which are not typically subjected to rigorous EMC requirements dictated in MIL-STD-461 (series).

1.2.1 Design Philosophy on Cable Spacing and Shielding

In order to meet the EMC objective, the following design philosophy on cable spacing and shielding has been developed. See section 6 for detailed procedures.

a. The most direct and cost-effective method of ensuring protection of susceptible cable from unwanted energy is by cable selection and spacing, i.e., establish spacing for cableways.

b. Where physical constraints make it impossible to meet the necessary cable spacing requirements, external cable shielding is required. Based on the level of shielding required and cable category, rigid conduit (section 2) or flexible conduit (section 3) is selected.

c. EMC cable, conduit and cableway markings are essential in preserving the designed cable spacing and shielding installation.

1.3 BACKGROUND

In March 1968, the original version of this handbook, identified as NAVSHIPS 0967-283-5010 (USL Report No. 603A), entitled "Handbook of Submarine Electromagnetic Shielding Practices," was prepared by the U.S. Navy Underwater Sound Laboratory, now known as the Naval Undersea Warfare Center (NUWC), Newport, RI.

Eventually, the name NAVSHIPS was changed to NAVSEA, and in November 1975, as part of change 4, the basic document number was changed to NAVSEA 0967-LP-283-5010. In December 1976, as part of change 5, the title of NAVSEA 0967-LP-283-5010 was changed to "Handbook of Shipboard Electromagnetic Shielding Practices" to reflect its applicability to surface ships as well as submarines. NAVSEA 0967-LP-283-5010 had undergone a total of five changes.

On 1 October 1982, the handbook was revised and was assigned the new identification number, S9407-AB-HBK-010, under the NAVSEA Technical Manual Identification Numbering System (TMINS) (Federal Stock No. 0910-LP-047-6300). The title, "Handbook of Shipboard Electromagnetic Shielding Practices" remained unchanged. On 30 September 1989, the handbook was revised and S9407-AB-HBK-010, Revision 1 was issued. The title "Handbook of Shipboard Electromagnetic Shielding Practices" remained unchanged.

1.3.1 Revision 2

This present document is the first change of, and supersedes, S9407-AB-HBK-010, Revision 1 and is identified as S9407-AB-HBK-010, Revision 2. This handbook consists of seven sections and six appendices. A brief description follows:

a. Section 1 presents a general description of this handbook in terms of its purpose, objective, and background. In addition, it describes the general content of each section and appendix. A list of referenced documents is also included.

b. Section 2 describes the requirements for rigid shielding conduit, conduit installation, preparation methods, and rigid conduit couplings.

c. Section 3 describes general requirements for the preparation and installation of flexible shielding conduit, both jacketed and non-jacketed, described in appendix D.

d. Section 4 describes the requirements for the GR2000-Series fittings (braze-on type) for use on the flexible metal shielding conduit specified in appendix D, in which the outside diameter dimension for each nominal size of conduit is standardized.

e. Section 5 describes the requirements for the RP2000-Series fittings (reusable type) for use on the flexible metal shielding conduit specified in appendix D, in which the outside diameter for each nominal size of conduit is standardized.

f. Section 6 provides cable spacing and shielding requirements applicable to naval shipboard installations. It categorizes cable types which are in accordance with military specifications MIL-C-17, MIL-C-915, MIL-C-24640, and MIL-C-24643. It also specifies the use of flexible shielding conduit described in appendix D, and for extreme EMI problems, it specifies the use of rigid shielding conduit described in section 2. It also provides cable marking requirements.

g. Section 7 describes the requirements for shielding enclosures, including the method for annealing mumetal. It also includes wiring practices and bonding and grounding requirements. Additionally, a description of the shielding hardware used for connecting to hull fittings is given. Guidelines for using aluminum or steel connectors and backshells are also included in this section.

h. Appendix A presents the cable separation and shielding requirements of section 5 of NAVSEA 0967-LP-283-5010 for reference purposes and, specifically, as background information for utilizing appendix B of this handbook.

i. Appendix B provides guidelines that deal with interface situations in which two different sets of cable spacing and shielding requirements are implemented on the same platform. For example, it addresses the requirements of section 5 of NAVSEA 0967-LP-283-5010 and the requirements of section 6 of either NAVSEA 0967-LP-283-5010 or S9407-AB-HBK-010 (including Revision 2).

   Although such interface situations are undesirable, they often exist and must be dealt with. It must be kept in mind that the requirements of both systems must be satisfied at the interface. Sometimes this results in more stringent spacing requirements than that of either system installed independently.

j. Appendix C contains the Qualified Products List (QPL) for the flexible shielding conduit specified in appendix D, and certain conduit fittings specified in sections 4 and 5.

k. Appendix D contains a specification which established new standards for flexible shielding conduit. It describes standard dimensions and tolerances for 11 different sizes of conduit, including minimum ID, OD over braid, and OD over jacket. Flexible shielding conduit (nonjacketed or rubber-jacketed) is specified as the primary means of shielding signal cables in submarines and other ships.

l. Appendix E presents a cable comparison chart for reference purposes. It compares the MIL-C-915 Shipboard cable types with its equivalent MIL-C-24643 Low-Smoke types, and also with its equivalent MIL-C-24640 Lightweight types.

m. Appendix F contains guidance for shielding and spacing requirements on platforms which contain dc generating coils. These requirements are in addition to the Section 6 shielding and spacing requirements.

1.3.2 Document Applicability

This document is applicable for all new Navy ship construction and in new SHIPALT installations on Navy ships. The applicable revision or change of this document to be used for new construction is the one in effect at the signing or issuing date of the specification or contract for ship construction. For SHIPALT installations the document to be used is the document in effect at the date of the authorization for the development of SHIPALT installation drawings. Backfitting existing installations in accordance with the procedures of this document should only be accomplished where the results of EMI testing and analysis indicate that cable spacing and shielding are the appropriate solution for a specific EMI problem.

The applicability of this document to ships which used one of the predecessor documents, either NAVSEA 0967-LP-283-5010 or S9407-AB-HBK-010, or a third document, the Electronics Installation and Maintenance Book (EIMB), NAVSEA 0967-LP-000-0150, is discussed in the following paragraphs.

a. Section 6 of this document shall be used for SHIPALT installations in those applications where Section 6 of either NAVSEA 0967-LP-283-5010 or S9407-AB-HBK-010 was previously employed. If any apparent conflicts arise between the documents, NUWC, Newport will provide assistance in resolving the problem. The current application of Section 6 criteria is as follows:

FF-1051/1078 Class SONAR systems (Backfit alterations)

DD963/DDG993 Class SONAR systems (Backfit alterations)

DDG 51 Class SONAR systems

CG 47 Class (CG49 and up) SONAR systems

SSBN 726 Class Command and Control area (Front half of ship)

SSN-21 Class and all succeeding New Submarine Contruction

b. The spacing and shielding criteria of Section 6 of NAVSEA 0967-LP-283-5010 is identical to the Section 6 criteria of S9407-AB-HBK-010 (original issue). However, the Section 6 criteria of Revision 1 was simplified with the elimination of two Radiator Cable Designators from the spacing chart, figure 6-6. The changes in figure 6-6 are discussed in paragraph c.

c. The spacing chart, figure 6-6, was modified in Revision 1 because the original spacing values for the cable designators, R1-8 and R2-8 did not follow the general increasing trend in magnetic field characteristics which occurs as the group numbers for R1 and R2 increase from 1 through 9. Therefore, the original values for R1-8 and R2-8 were deleted. This resulted in two empty lines labeled R1-8 and R2-8 which were then eliminated from the chart. The MIL-C-915 cables which were originally designated R1-8 and R2-8 were shifted to the R1-2 and R2-2 designators respectively. Also, changes were made in the original cable types selected as model cables for cable designators R3-1 and R3-2. The model cable for R3-1 was changed from cable type DSS-2 to cable type 2U; the model cable for R3-2 was shifted from cable type DSS-3 to DSS-2,

and the model for R3-3 remained cable type DSS-4. The reason for the change was to provide a greater range for magnetic field fall-off.

d. Section 5 of NAVSEA 0967-LP-283-5010 provided an early criteria for cable spacing and shielding which preceded Section 6. The criteria is included for reference in Appendix A of this document. The use of Section 5 requirements can be identified by cable marking suffixes, i.e., (XLL), (LL). These requirements were used on all submarine installations and some surface ship SONAR installations not identified in paragraph (a) above.

Installations which were made in accordance with cable spacing and shielding requirements of NAVSEA 0967-LP-283-5010, Section 5 should remain under those requirements. (NOTE: The latest shielding hardware of this document may be used.) However, where a system is to undergo a major modification, or a compartment is to be completely gutted, it may be advantageous to consider the cable spacing and shielding requirements of Section 6 of this document particularly if EMI problems have been previously identified in the existing system, or in a new system which is being installed. As an aid in the situation where interfacing is needed between the previous and current installation requirements, the guidelines are provided in appendix B.

e. Electronics Installation and Maintenance Book (EIMB), NAVSEA 0967-LP-000-0150, EMI Reduction, and various specifications have provided a variety of cable separation requirements generally used on surface ships other than for those noted in paragraph "a." above. The use of these requirements can usually be identified by the cable designations of "A" active (i.e., RA-RT), "S" susceptible (i.e., RS-RN), and "none" for passive (i.e., R-RR). Cable separations made under these requirements have generally not been effectively maintained. The requirements of Section 6 of this document shall be used for new SHIPALT installations and where backfitting is authorized. Where there is a conflict between the EIMB requirements and the requirements of this document, the requirements of this document shall be used. It is intended that the EIMB will be revised to refer to this document for all future cable separation and shielding requirements.

1.4 LIST OF REFERENCED DOCUMENTS

The following list includes Federal and Military Specifications and Standards and other publications and drawings that appear in the text, notes, or drawings throughout this handbook.

SPECIFICATIONS

Federal

FF-W-84	Washers, Lock (Spring)
L-P-410	Plastic, Polyamide (nylon), Rigid: Rods, Tubes, Flats, Molded and Cast Parts
O-F-499	Flux, Brazing, (Silver Alloy, Low-melting Point)
QQ-A-225	Aluminum and Aluminum Alloy Bar, Rod, Wire or Special Shapes; Rolled, Drawn or Cold Finished; General Specification for

SPECIFICATIONS (Cont'd)

QQ-B-575	Braid, Wire, (Copper, Tin-Coated, or Silver Coated, Tubular, or Flat)
QQ-B-637	Brass, Naval: Rod, Wire, Shapes, Forgings, and Flat Products with Finished Edges (Bar, Flat Wire, and Strip)
QQ-B-650	Brazing Alloys, Copper, Copper-Zinc, and Copper-Phosphorous
QQ-B-654	Brazing Alloys, Silver
QQ-P-35	Passivation Treatments for Corrosion-Resisting Steel
QQ-P-416	Plating, Cadmium (Electrodeposited)
QQ-S-698	Steel, Sheet and Strip, Low-Carbon
QQ-S-763	Steel Bars, Wire, Shapes, and Forgings, Corrosion-Resisting
W-F-408	Fittings for Conduit, Metal Rigid (Thick-Wall and Thin-Wall (EMT) Type)
WW-C-440	Clamps, Hose, (Low-Pressure)

Military

MIL-B-857	Bolts, Nuts, Studs, and Tap-Rivets (and Material for Same)
MIL-C-17	Cables, Radio Frequency, Flexible and Semirigid, General Specification for
MIL-C-915	Cable and Cord Electrical, for Shipboard Use, General Specifications for
MIL-C-5015	Connectors, Electrical, Circular Threaded, AN Type, General Specification for
MIL-C-24231	Connectors, Plugs, Receptacles, Adapters, and Hull Inserts, Pressure-Proof, General Specifications for

SPECIFICATIONS (Cont'd)

MIL-C-24640	Cable, Electrical, Lightweight, for Shipboard Use, General Specification for
MIL-C-24643	Cable and Cord, Electrical, Low Smoke, for Shipboard Use, General Specification for
MIL-C-26482	Connectors, Electrical, (Circular, Miniature, Quick Disconnect, Environment Resisting), Receptacles and Plugs, General Specifications for
MIL-C-28840(EC)	Connectors, Electrical, Circular, Threaded, High Density, High Shock, Shipboard, Class D, General Specification for
MIL-C-39012	Connectors, Coaxial, Radio Frequency; General Specification for
MIL-C-81703	Connectors, Electric, Circular, Miniature, Rack and Panel or Push-Pull Coupling, Environment Resisting
MIL-C-83723	Connectors, Electrical, (Circular, Environment Resisting), Receptacles and Plugs, General Specification for
MIL-E-16400	Electronic, Interior Communication and Navigation Equipment, Naval Ship and Shore; General Specification for
MIL-I-631	Insulation, Electrical, Synthetic-Resin Composition, Nonrigid
MIL-I-23053	Insulation Sleeving, Electrical, Heat-Shrinkable, General Specification for
MIL-P-116	Preservation - Packaging, Methods of
MIL-P-5516	Packing, Preformed, Petroleum Hydraulic Fluid Resistant, 160°F

SPECIFICATIONS (Cont'd)

MIL-P-24691/1	Pipe and Tube, Carbon Steel, Seamless
MIL-PRF-24758A	Conduit Systems, Flexible
MIL-R-6855	Rubber, Synthetic, Sheets, Strips, Molded or Extruded Shapes
MIL-R-46846	Rubber, Synthetic, Heat-Shrinkable
MIL-S-24149	Studs, Arc Welding, and Arc Shields (Ferrules), General Specifications for
MIL-S-24235	Stuffing Tubes, Metal and Packing Assemblies for Electrical Cables, General Specification for
MIL-W-16878	Wire, Electrical, Insulated, General Specifications for

STANDARDS

Federal

FED-STD-66	Steel, Chemical Composition and Hardenability

Military

MIL-STD-1399 (NAVY)	Interface Standard for Shipboard Systems, Section 300A: Electric Power, Alternating Current (Metric)
MIL-STD-129	Marking for Shipment and Storage
MIL-STD-130	Identification Marking of U.S. Military Property
MIL-STD-461	Electromagnetic Emission and Susceptibility Requirements for the Control of Electromagnetic Interference
MIL-STD-463	Definitions and System of Units, Electromagnetic Interference and Electromagnetic Compatibility Technology

STANDARDS (Cont'd)

MIL-STD-1310	Shipboard Bonding, Grounding, and Other Techniques for Electro-magnetic Compatibility and Safety
MS3155 (NAVY)	Connector, Electric, Rear Accessory Design Standard

Drawings

BUSHIPS Dwg No. SSB(N)616-404-2091704	Mumetal Connection and Pull Boxes; Assembly and Details
NAVSHIPS Dwg No. SS(N)637 406 H 4, 316, 557	USS STURGEON Antenna Installation, AN/BRA-29 (XU-2B)
NAVSHIPS Dwg No. 80064-302-4788653	Installation Methods for High-permeability Flexible Conduit Hardware
Strategic Weapons Systems Dwg No. 3191445, Rev F	(SWS) Coordination
U.S. Navy Underwater Sound Lab. Dwg No. 00841D1	Stuffing Tube MX-7637/U
S9300-AW-EDG-010/EPISM	Electric Plant Installation Standard Methods, Standard Engineering Drawings

OTHER PUBLICATIONS

American Society for Testing and Materials (ASTM)

ANSI/ASTM-A-698	Magnetic Shield Efficiency in Attenuating Alternating Magnetic Fields
ANSI/ASTM-A-753	Specification for Nickel-Iron Soft Magnetic Alloys
ANSI/ASTM-D4066	Standard Specification for Nylon Injection and Extrusion Materials
ASTM-STD-B85	Aluminum Alloy Die Castings
ASTM-D-257	Surface Volume Resistivity

OTHER PUBLICATIONS(Cont'd)

SAE AMS 2404C	Electroless Nickel Plating

Government Form (Approved by Budget Bureau)

DD Form 1718	Certification of Qualified Products

National Bureau of Standards

Handbook H28	Screw-Thread Standards for Federal Services (Parts I and II)

NUSC Technical Memorandum No. 811123, Dated 15 December 1981 Section-6, Shipboard Cable Spacing and Shielding Requirements: Supplemental Computer Program for HP85 Computer

NUSC CONFIDENTIAL Technical Memorandum No. 871161, Dated 2 Sept 1988 "Equipment Design-Performance Sensitivity and Other Data for Existing Government Furnished Equipment Aboard SSN and SSBN Ships" (U).

SECTION 2
RIGID SHIELDING REQUIREMENTS

Section 2

RIGID SHIELDING CONDUIT REQUIREMENTS

TABLE OF CONTENTS

Paragraph		Page
2.1	INTRODUCTION	2-1
2.2	SCOPE	2-1
2.3	RIGID CONDUIT SPECIFICATION	2-1
2.4	RIGID CONDUIT INSTALLATION	2-2
2.4.1	Nontopside and Topside Use of Rigid Conduit	2-2
2.4.2	Grounding Requirements for Rigid Conduit	2-2
2.4.3	Shock and Vibration Protection	2-4
2.5	RIGID CONDUIT (PIPE) PREPARATION	2-4
2.5.1	Cutting Rigid Conduit	2-4
2.5.2	Bending Rigid Conduit	2-4
2.5.3	Cleaning Rigid Conduit	2-4
2.5.4	Conduit (Pipe) Threads	2-4
2.5.5	Torque Requirements	2-4
2.6	RIGID CONDUIT COUPLINGS	2-6
2.6.1	Coupling for Rigid Conduit to Rigid Conduit	2-6
2.6.2	Coupling for Rigid Conduit to Flexible Conduit	2-6

LIST OF ILLUSTRATIONS

Figure		Page
2-1	Methods of Grounding Rigid Conduit	2-3
2-2	Rigid Metal Conduit Coupling Attached to Conduit	2-5
2-3	Rigid Metal Conduit Coupling	2-5
2-4	Coupling for Rigid Conduit to Flexible Conduit	2-7
2-5	Male Ferrule, Used with Flexible Metal Conduit	2-8

LIST OF TABLES

Table		Page
2-1	Carbon Steel Pipe (MIL-P-24691/1)	2-2

Section 2

RIGID SHIELDING CONDUIT REQUIREMENTS

2.1 INTRODUCTION

The rigid shielding conduit described in this section consists of carbon steel pipe (MIL-P-24691/1) used as conduit for electromagnetic shielding of cables. The conduit can be used for the purpose of either protecting enclosed cables from external radiation, or for attenuating electromagnetic radiation emitted by enclosed cables.

While rigid conduit is less expensive to buy, installation is generally more expensive than flexible shielding conduit specified in appendix D because it must be installed by a skilled pipe-fitter. Also, rigid conduit is much heavier than flexible conduit. For example, the 3/4-inch rigid conduit, at 1.32 pounds per foot, is four times heavier than typical 3/4-inch ID nonjacketed conduit at 0.33 pound per foot, and is over two-and-a-half times heavier than typical 3/4-inch ID jacketed flexible conduit at 0.50 pound per foot.

Although at frequencies above 200 Hz the shielding effectiveness of an infinite length of rigid conduit is higher than that of an infinite length of flexible conduit (see figure 6-7), when actual installations were examined, it was found that the flexible magnetic installation was less susceptible to magnetic fields because it had fewer end fittings than the rigid conduit installation. The major problem with rigid metal conduit is that it is much more difficult to run rigid metal conduit so that the areas of reduced shielding caused by the connector, transition fittings, and adapters are located in low magnetic flux regions. In addition, if the field levels are too high and the shield of the conduit is not enough to protect the system cables, it is a lot easier and less expensive to move flexible conduit than rigid conduit.

For the reasons mentioned, flexible conduit is preferred over rigid conduit except in those cases where flexible conduit does not provide adequate shielding (see paragraph 6.7). For existing installations of rigid conduit, the policy of NAVSEA is to let the conduit remain as installed. However, in cases where repairs or modifications to the installed rigid conduit are required, the flexible conduit (where adequate) shall be substituted for the rigid conduit.

2.2 SCOPE

This section describes specification requirements for the rigid shielding conduit, conduit installation, preparation methods, and rigid conduit couplings.

2.3 RIGID CONDUIT SPECIFICATION

Rigid metal conduit used as an electromagnetic shield for cables shall be carbon steel pipe in accordance with specification MIL-P-24691/1, "Pipe and Tube, Carbon Steel, Seamless." The pipe shall have a nominal wall thickness of not less than 0.120 inch. See table 2-1 for sizes and types.

Table 2-1. Carbon Steel Pipe (MIL-P-24691/1)

Pipe Size Nominal ID (inches)	Grade Per MIL-P-24691/1	Min Wall Thickness (inches)	OD (inches)	Thread Size NPSM (threads/in.)	Minimum Torque (lb-ft)
1/4	A	0.120	0.540	1/4 - 18	25
3/8	A	0.126	0.675	3/8 - 18	25
1/2	B	0.147	0.840	1/2 - 14	50
3/4	B	0.154	1.050	3/4 - 14	100
1	B	0.179	1.315	1 - 11-1/2	100
1-1/4	B	0.191	1.660	1-1/4 - 11-1/2	100
1-1/2	B	0.200	1.900	1-1/2 - 11-1/2	100
2	B	0.218	2.375	2 - 11-1/2	100
2-1/2	B	0.276	2.875	2-1/2 - 8	100
3	B	0.300	3.500	3 - 8	100

2.4 RIGID CONDUIT INSTALLATION

2.4.1 Nontopside and Topside Use of Rigid Conduit

The rigid conduit described herein is intended for submarine and non-topside use to provide cable shielding against cable-to-cable and equipment-to-cable coupling. Conduit employed for topside use is addressed by MIL-STD-1310 and is intended to provide shielding from electromagnetic pulse (EMP) and radiating antennas. (The MIL-STD-1310 definition for conduit includes circular tube or pipe and square or rectangular sheet-metal trunks which enclose cables for shielding protection.)

2.4.2 Grounding Requirements for Rigid Conduit

The shielding effectiveness provided by rigid conduit, against a magnetic field caused by structure current flowing on its outer surface, is proportional to the number of "skin depths" in the conduit wall material. This is discussed in detail in paragraph 7.3.2 of section 7. In most cases the 0.120-inch minimum wall thickness of the rigid conduit provides sufficient attenuation: approximately 30 dB at 200 Hz. This will give adequate protection against structure-current effects. Protection increases exponentially with frequency and effectively shields the internal cables from EMI caused by structure current flowing on the conduit.

In view of the preceding characteristics, rigid conduit shall be grounded in accordance with MIL-STD-1310. It states that conduits 10 feet or longer shall be bonded to ground potential at a point not greater than 5 feet from each end. It also states that class "B" bonding is acceptable; however, where it is not inherent in the installation of the conduit, bond straps are required. Figure 2-1 illustrates the methods of grounding by means of bond straps.

Grounding conduit at more than one point along its run constitutes "multiple-point grounding." This term includes inadvertent grounding of conduit as well as intentional grounding of conduit that is installed in accordance with approved plans. Although multiple-point grounding of the conduit is the recommended configuration, isolation of the conduit from the equipment cabinet may be necessary to reduce structure-current flow on the cabinet and its effect on susceptible equipment housed therein. (See figure 5-20, "RP 2440 Adapter, Nonmetallic" for isolation of conduit-end from its termination).

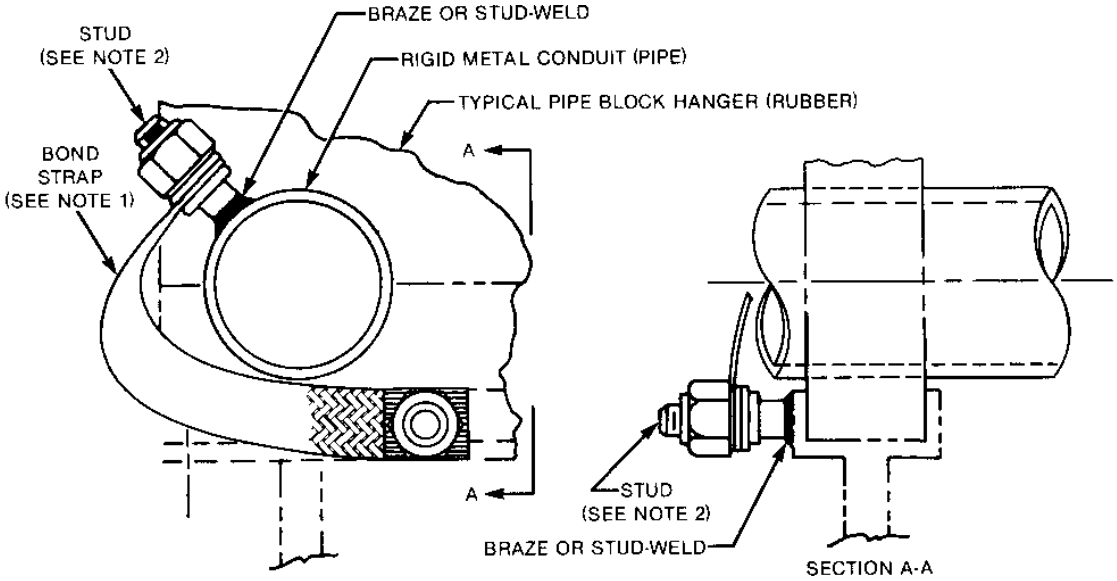

Figure 2-1a. Method of Grounding Rigid Conduit Supported by Pipe Block Hangers

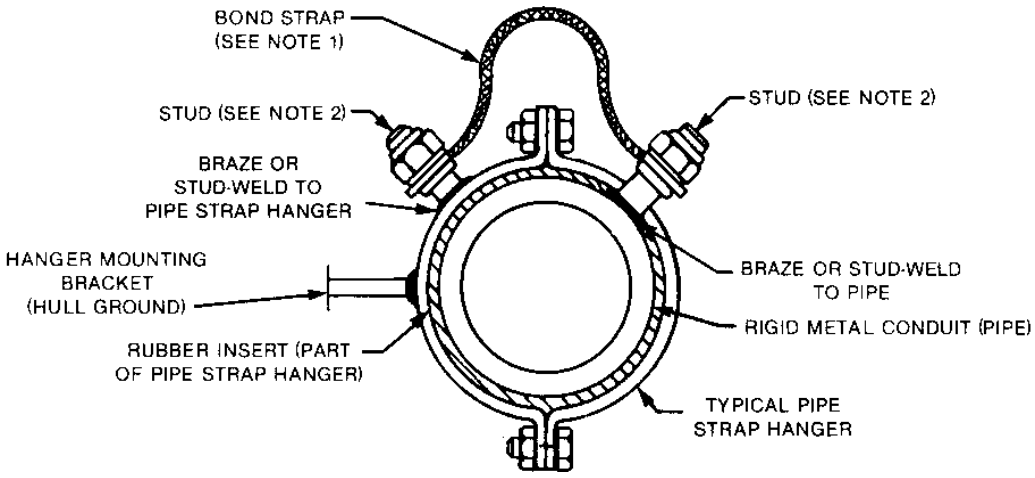

Figure 2-1b. Methods of Grounding Rigid Conduit Supported by Pipe Strap Hangers

Notes:

1. USE TYPE IV BOND STRAP IAW MIL-STD-1310 (NAVY).
2. USE STUD AND NUT METHOD IAW MIL-STD-1310 (NAVY) FOR ATTACHING NONWELDED BOND STRAPS.

Figure 2-1. Methods of Grounding Rigid Conduit

Where a hybrid (a combination of rigid and flexible) conduit installation requires single-point grounding, the flexible conduit end opposite the rigid conduit must be isolated from ground at both ends of the cable run. The rigid conduit provides the single-point ground. Multiple grounds along the rigid conduit portion of the run are acceptable.

2.4.3 Shock and Vibration Protection

The blast effect following the explosion of a bomb, torpedo, depth charge, etc., is devastating and widespread. Moreover, such explosions are often followed by destructive waves of vibration. Accordingly, piping and associated equipment installations should be designed to be shock and vibration resistant. Brittle materials such as cast iron should not be used for fittings. Piping should not run in direct contact with decks or bulkheads, but rather should be cushioned by rubber-padded pipe hangers. The rigid conduit should be terminated with approximately 30 inches or less of the flexible conduit described in section 3 to absorb shock and vibration at the point of entry to an equipment enclosure, a bulkhead stuffing tube, or a hull fitting. Conduit fittings and methods described in this handbook shall be used for coupling the rigid conduit to the flexible conduit, and for attaching the flexible conduit to connectors, stuffing tubes, and hull fittings.

2.5 RIGID CONDUIT (PIPE) PREPARATION

2.5.1 Cutting Rigid Conduit

Pipe ends shall be cut square with a hacksaw or metal-cutting bandsaw. Burrs shall be removed by reaming or filing.

2.5.2 Bending Rigid Conduit

Any acceptable pipe bending method that will not deform the inside diameter of the pipe may be used.

2.5.3 Cleaning Rigid Conduit

After all machining, welding, and brazing operations are completed, the exterior and interior surfaces of the pipe shall have all rust or visible corrosion products and flux removed, and shall be thoroughly cleaned of grease, oil, and dirt by solvent wiping, vapor degreasing, caustic washing and rinsing, or other effective methods.

2.5.4 Conduit (Pipe Threads)

This conduit (pipe) shall be threaded with NPSM threads (American Standard straight pipe threads for mechanical joints). Straight pipe threads are required to mate with such mechanical assemblies as the rigid conduit coupling illustrated in figure 2-2. Also, straight pipe threads are more suited for mechanical assemblies since adjustments can be made between threaded parts and secured by use of a locknut. NPSM thread sizes for various pipe sizes are listed in table 2-1.

2.5.5 Torque Requirements

A mechanically tight coupling on threaded steel pipe fittings normally requires a minimum torque as shown in table 2-1. A locknut shall be used with threaded pipe and fittings when the threaded joint is such that the minimum torque requirement cannot be achieved. The torque requirements of joints that include threads of MS- and UG-type connectors and conduit fittings described in this handbook shall be tightened to manufacturer's specifications. See S9300-AW-EDG-010/EPISM for MS connector backshell torque values.

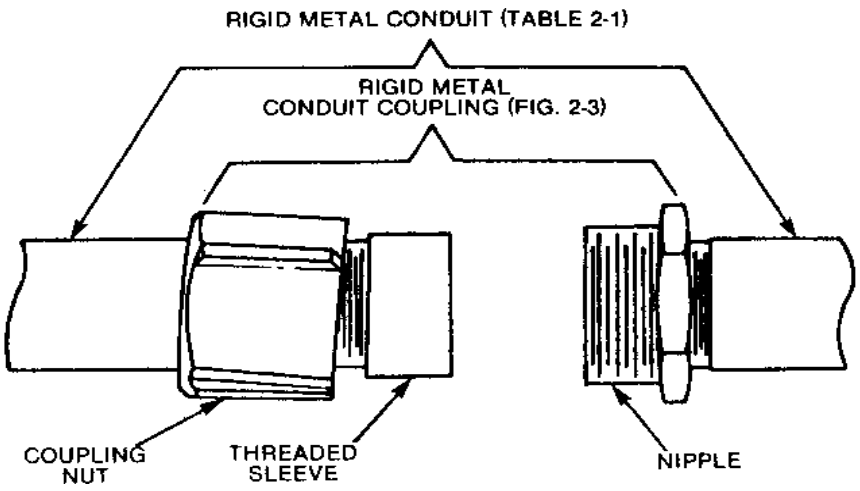

Figure 2-2. Rigid Metal Conduit Coupling
Attached to Conduit

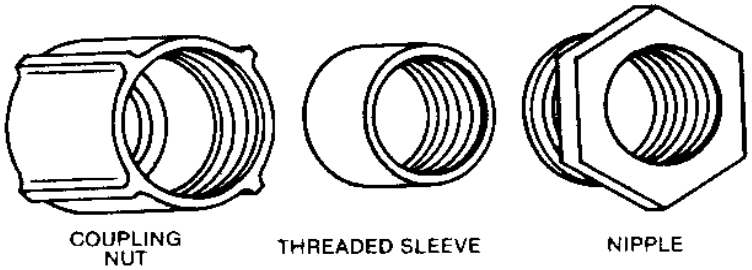

SIZE (inches)	THOMAS & BETTS CO. CAT. NO.	APPLETON ELECTRIC CO. CAT. NO.	CROUSE-HINDS CO. CAT. NO.
3/8	674	—	—
1/2	675	EC-50	UNF105
3/4	676	EC-75	UNF205
1	677	EC-100	UNF305
1-1/4	678	EC-125	UNF405
1-1/2	679	EC-150	UNF505
2	680	EC-200	UNF605
2-1/2	681	EC-250	UNF705
3	682	EC-300	UNF805

Notes:

1. THE MANUFACTURES LISTED ABOVE ARE SUGGESTED SOURCES. ANY EQUIVALENT COUPLING IN ACCORDANCE WITH FEDERAL SPECIFICATION W-F-408 IS ACCEPTABLE.
2. THE MALE FERRULE (FIGURE 2-5) IS SUBSTITUTED FOR THE NIPPLE FOR COUPLING RIGID CONDUIT TO FLEXIBLE CONDUIT.
3. THOMAS & BETTS CO. IDENTIFIES THIS TYPE OF COUPLING AS THEIR “ERICSON COUPLING”.

Figure 2-3. Rigid Metal Conduit Coupling

2.6 RIGID CONDUIT COUPLINGS

2.6.1 Coupling for Rigid Conduit to Rigid Conduit

Figure 2-2 illustrates the relative positions of the components of a coupling used for joining two lengths of rigid metal conduit. Figure 2-3 shows a sketch of the three components of the rigid metal conduit coupling and includes a list of suggested sources.

2.6.2 Coupling for Rigid Conduit to Flexible Conduit

Figure 2-4 shows the hardware required to join rigid metal conduit to flexible metal conduit. The table lists the coupling components used with various sizes of rigid and flexible conduit. Note that in this assembly the male ferrule (figure 2-5) is used in place of the nipple supplied as part of the rigid metal conduit coupling (figure 2-3). The male ferrule is brazed to the flexible metal conduit and the assembly is joined using the same torque requirements for rigid conduit coupling. This assembly provides the transition from rigid conduit to the short lengths of flexible conduit at terminal points in the cable run.

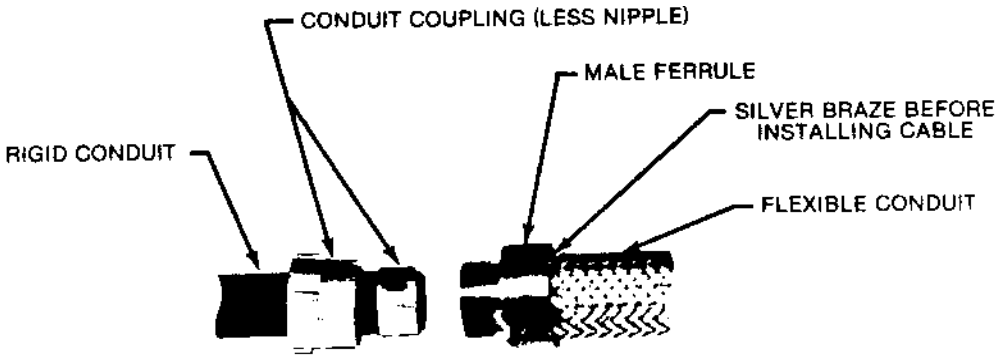

RIGID CONDUIT (Table 2-1)	FLEXIBLE CONDUIT (Appendix D)		CONDUIT COUPLING (Fig. 2-3)	MALE FERRULE (Fig. 2-5)
Nom. ID	Nom. ID	Part No.	Size	Size Code
1/4	1/4	EM02	3/8	EM02
3/8	3/8	EM03	3/8	EM03
1/2	1/2	EM04	1/2	EM04
3/4	5/8	EM05	3/4	EM05
3/4	3/4	EM06	3/4	EM06
1	1	EM08	1	EM08
1-1/4	1-1/4	EM10	1-1/4	EM10
1-1/2	1-1/2	EM12	1-1/2	EM12
2	2	EM16	2	EM16
2-1/2	2-1/2	EM20	2-1/2	EM20
3	3	EM24	3	EM24

Notes:

1. AN OPTIONAL METHOD OF COUPLING RIGID CONDUIT TO FLEXIBLE CONDUIT IS THE RP2210 COUPLING DESCRIBED IN SECTION 5.
2. ALL DIMENSIONS IN INCHES.

2-4. Coupling for Rigid Conduit to Flexible Conduit

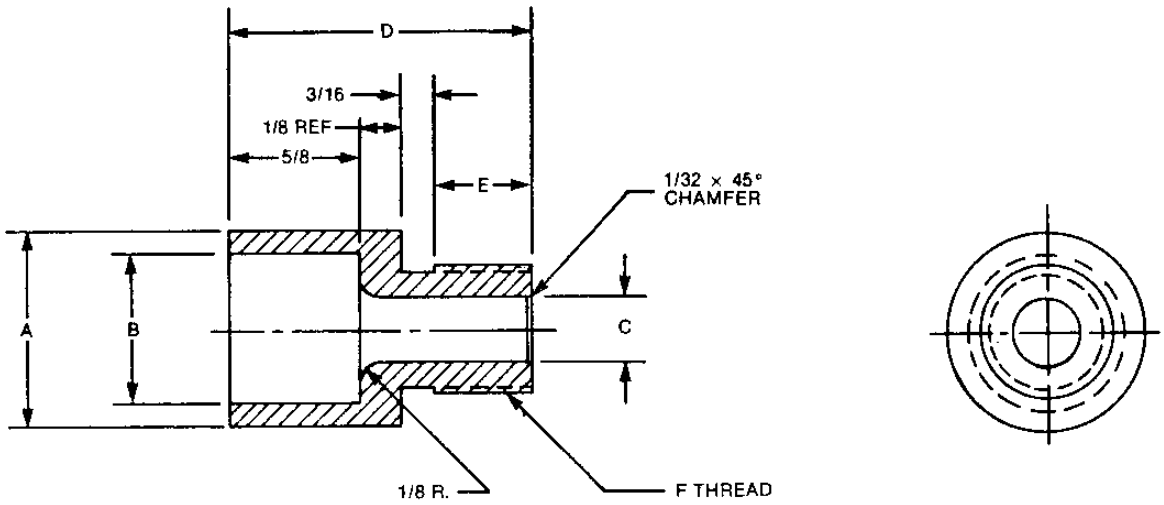

FERRULE Size Code	CONDUIT SIZE (Nom. ID)	A +.000 −.010	B +.000 −.010	C +.015 −.000	D ±.015	E ±.015	F THREAD CLASS 2A
EM02	1/4	0.63	0.47	0.25	1.313	0.375	7/8 - 18 UN
EM03	3/8	0.75	0.59	0.37	1.313	0.375	7/8 - 18 UN
EM04	1/2	0.90	0.74	0.50	1.438	0.500	1-1/8 - 14 UN
EM05	5/8	1.03	0.87	0.62	1.438	0.500	1.288 - 14 UN
EM06	3/4	1.15	0.99	0.75	1.438	0.500	1.288 - 14 UN
EM08	1	1.46	1.30	1.00	1.438	0.500	1-1/4 - 11-1/2 NPSM
EM10	1-1/4	1.71	1.55	1.25	1.563	0.625	2.025 - 11-1/2 UN
EM12	1-1/2	1.96	1.80	1.50	1.688	0.750	2-1/4 - 11-1/2 UN
EM16	2	2.50	2.34	2.00	1.688	0.750	2-1/2 - 8 NPSM
EM20	2-1/2	3.00	2.84	2.50	1.813	0.875	3 - 8 NPSM
EM24	3	3.50	3.34	3.00	1.813	0.875	3-1/2 - 8 NPSM

Notes:

1. MATERIAL: AISI-TYPE LOW-CARBON, COLD-ROLLED STEEL PER FED. STD. NO. 66, HAVING CHEMICAL COMPOSITIONS WITHIN THE FOLLOWING RANGES:

CARBON	(C)	.08% TO .25% MAX
MANGANESE	(Mn)	.25% TO 1.15% MAX
PHOSPHOROUS	(P)	.04% TO .12% MAX
SULPHUR	(S)	.05% TO .35% MAX
LEAD	(Pb)	.15% TO .35% MAX

2. FINISH: CADMIUM PLATING, PER QQ-P-416, TYPE I, CLASS 3.
3. ALL DIMENSIONS IN INCHES.
4. BREAK ALL SHARP EDGES.

Figure 2-5. Male Ferrule, Used with Flexible Metal Conduit

SECTION 3

FLEXIBLE SHIELDING CONDUIT REQUIREMENTS

Section 3

FLEXIBLE SHIELDING CONDUIT REQUIREMENTS

TABLE OF CONTENTS

Paragraph		Page
3.1	BACKGROUND	3-1
3.2	SCOPE	3-1
3.3	REQUIREMENTS FOR MANUFACTURING AND GOVERNMENT ACCEPTANCE OF FLEXIBLE SHIELDING CONDUIT	3-1
3.3.1	Specification for Flexible Shielding Conduit	3-2
3.3.2	Qualified Products List	3-2
3.4	FLEXIBLE CONDUIT INSTALLATION	3-2
3.4.1	Nontopside and Topside Use of Flexible Conduit	3-2
3.4.2	Grounding Requirements for Flexible Conduit	3-2
3.4.3	Shielding Effectiveness of Flexible Conduit	3-3
3.4.4	Partial Shielding of Cable	3-3
3.4.5	Bonding and Grounding Methods	3-3
3.4.6	Termination and Coupling of Type 2 Conduit	3-4
3.4.7	Selection of Flexible Conduit Size	3-4
3.5	FLEXIBLE CONDUIT PREPARATION	3-8
3.5.1	Cleaning Flexible Conduit	3-8
3.5.2	Forming Flexible Conduit	3-8
3.5.3	Cutting Flexible Conduit	3-8
3.5.4	Silver Brazing Fittings to Conduit	3-10

LIST OF ILLUSTRATIONS

Figure		Page
3-1	Method of Grounding Flexible Conduit	3-5
3-2	Type IV Bond Strap Fabrication Details	3-6
3-3	Method of Preparing Conduit for Brazing and Cutting	3-9

LIST OF TABLES

Table		Page
3-1	Conduit Dimensions (Inches)	3-7

Section 3

FLEXIBLE SHIELDING CONDUIT REQUIREMENTS

3.1 BACKGROUND

The use of flexible shielding conduit as a means of achieving EMC was made a requirement in October 1969 in section 5 of NAVSEA 0967-LP-283-5010.

The specification for the flexible shielding conduit (also effective October 1969) was presented in appendix 1 of NAVSEA 0967-LP-283-5010. It listed 10 conduit sizes and established the dimensions for minimum inside diameter for each size. However, there were no restrictions placed on the dimensions for the outside diameters, and as a result of this lack of standardization, the outside diameter of any particular size of conduit varied from manufacturer to manufacturer. Similarly, the sizes of fittings designed to terminate or couple the conduit varied with each manufacturer, so that the fittings from one manufacturer would not necessarily fit conduit from another manufacturer.

To ensure that a fitting would fit and function properly on a particular size conduit, both the fitting and the conduit had to be obtained from the same manufacturer. Thus, a separate supply of fittings would be necessary to fit conduit made by each individual manufacturer.

A new specification for flexible shielding conduit, presented in appendix D, establishes standard dimensions for the outside diameters (in addition to other requirements) so that fittings made by a qualified manufacturer would fit conduit made by any qualified manufacturer.

3.2 SCOPE

This section identifies and describes the specifications and procedures for the purchase and installation of high permeability flexible shielding conduit. Procedures include those that relate to bonding, grounding, and handling of this type conduit.

3.3 REQUIREMENTS FOR MANUFACTURING AND GOVERNMENT ACCEPTANCE OF FLEXIBLE SHIELDING CONDUIT

The purpose of this conduit is to shield low-level signal cables from the influence of external magnetic fields. It can also be used, within saturation limits of the conduit material, to reduce magnetic field radiation from power and transmitting cables. The primary frequencies of interest are those below 100 kHz. For this conduit to effectively perform its intended functions, its electrical and physical properties must be maintained throughout the manufacturing process. The specifications and quality control requirements identified in this section are intended to ensure this result.

3.3.1 Specification for Flexible Shielding Conduit

Appendix D of this document contains a specification that is invoked on flexible shielding conduit purchased for use by the Navy. The specification provides detailed requirements that cover the following types of conduit:

Type 1 conduit. Type 1 nonjacketed conduit is used in installations where ground or structureborne currents are minimal along the path of the conduit, or where the cable being shielded is not susceptible to interference from current flow on the conduit. (Conduit can become a conductor for ground or structureborne currents through contacts with ground potentials along the length of the conduit.)

Type 2 conduit. Type 2 rubber-jacketed conduit is used for shielding an extremely low level, low frequency signal cable which would be susceptible to interference from current flowing on the conduit. The rubber jacket prevents this current flow by electrically insulating the conduit from unintentional ground contacts.

3.3.2 Qualified Products List

A qualified products list for flexible conduit for low frequency shielding is maintained for Navy procurement purposes (see appendix C). It provides information concerning flexible conduit which meets the requirements of the specification in appendix D. Manufacturers wishing to have their products tested for qualification should submit samples in accordance with the instructions contained in this specification. Conduit which is tested shall meet the requirements of appendix D in order to be approved by NAVSEA and to be added to the qualified products list.

3.4 FLEXIBLE CONDUIT INSTALLATION

3.4.1 Nontopside and Topside Use of Flexible Conduit

The flexible shielding conduit described herein is intended for submarine and nontopside use to provide cable shielding against magnetic field cable-to-cable and equipment-to-cable coupling. Requirements for flexible conduits which are approved as cable shields for EMI and electromagnetic pulse (EMP) protection in a ship's topside area are listed in MIL-STD-1310.

3.4.2 Grounding Requirements for Flexible Conduit

The shielding effectiveness provided by flexible shielding conduit, against structure current flowing on its outer surface, is proportional to the number of "skin depths" in the conduit wall material. This is described in detail in paragraph 7.3.2 of section 7. As frequency is lowered, the 0.008-inch wall thickness of typical, high permeability, flexible shielding conduit provides only one "skin depth" (8.686 dB of attenuation) at approximately 2 kHz. At 10 kHz approximately 20 dB of shielding is provided by this conduit. The 20-dB value represents the minimum amount of protection required for most shielding applications. It is for this reason that single-point grounding of the conduit, to reduce structure-current flow, is required below 10 kHz for S4-1, S4-2 and S4-3 cable categories. Single-point grounding requires the use of Type 2 (rubber-jacketed) conduit in which the rubber-jacket insulates the conduit from unintentional ground contacts. A Type IV bond strap in accordance with MIL-STD-1310 is required for grounding the conduit. (See figure 5-20, "RP2440 Adapter, Non-metallic" for isolation of conduit-end from its termination.

The determination of the best grounding configuration of magnetic shielding conduit (both rigid and flexible) for frequencies between 10 kHz and 100 kHz, normally requires a case-by-case engineering analysis by NUWC, Newport, for example, as authorized by NAVSEA. With the absence of this analysis, it is recommended the installation drawings be followed. If there is not direction on the drawings concerning the grounding configuration, the following recommendation will provide the highest probability of attaining EMC:

- For cable categories S1-1, S1-2, S1-3, S2-1, S2-2, S2-3, S4-1, S4-2 and S4-3, use a single-point ground configuration. These are the most sensitive cable categories and would be susceptible if there were sufficient currents flowing on the conduit.

- For cable categories other than S1-1, S1-2, S1-3, S2-1, S2-2, S2-3, S4-1, S4-2 and S4-3, use a multiple-point ground configuration. These cable categories are less susceptible to the current amplitudes which, experience has revealed, exist on the conduit. For these cable categories, it is not technically cost-effective to implement the single-point ground in an all-inclusive manner.

At frequencies above 100 kHz, where approximately 70 dB of attenuation is provided against structure current, multiple-point grounding of the conduit is recommended for reasons of economy, ease of installation, and to reduce coupling problems caused by standing waves. The term "multiple-point grounding", as used in this document, includes inadvertent grounding of conduit as well as intentional grounding of conduit installed in accordance with existing plans. Note that multiple-point grounding allows the use of Type 1 (unjacketed) conduit installed in accordance with MIL-STD-1310.

3.4.3 Shielding Effectiveness of Flexible Conduit

The shielding effectiveness of flexible shielding conduit against magnetic fields is somewhat greater than just the penetration loss provided against structure current as described in paragraph 3.4.2. In addition to the penetration loss, there exists another loss that is dependent upon the direction of the magnetic field incident on the conduit. This loss is maximum for flux approaching perpendicular to the conduit axis and minimum for that approaching parallel to the axis. In practice, the field is neither uniform nor does it approach the conduit axis at precisely zero or 90 degrees. Therefore, there is always a penetration loss plus some additional loss due to these boundary conditions.

The total shielding effectiveness exhibited by the conduit was determined empirically and is presented in figure 6-7 of this document. Provided that the grounding requirements of paragraph 3.4.2 are observed, this is the shielding effectiveness that can be expected in practice.

3.4.4 Partial Shielding of Cable

Flexible shielding conduit may be used to enclose a portion of a cable run as an alternative to enclosing the entire cable run. The subject of partial shielding of cables is addressed in paragraph 6.7.1 of section 6.

3.4.5 Bonding and Grounding Methods

Shipboard bonding and grounding methods for flexible shielding conduit shall be in accordance with MIL-STD-1310 which states that the method of bonding requires the use of a Type IV bond strap. One end of the bond strap is attached to the conduit braid by means of a hose clamp (with worm-gear adjustment), and the other end is attached, typically, to a stud at ground potential. (See figures 3-1 and 3-2.)

For single-point grounding, the rubber jacket of Type 2 conduit shall be cut away to expose the braid at the area to be grounded in order to facilitate attaching the bond strap.

For multiple-point grounding, the unjacketed conduit (Type 1) greater than 10 feet in length shall be bonded to ground potential at a point not greater than 5 feet from each end. Class "B" bonding is acceptable; however, where it is not inherent in the installation of the conduit, the Type IV bond straps are required.

3.4.6 Termination and Coupling of Type 2 Conduit

A Type 2 conduit installation must be insulated from the ground plane except at a single point specified in the installation drawings. The following installation procedures are provided to ensure that inadvertent grounding of the conduit does not occur.

a. Couplings: When two lengths of Type 2 conduit are to be coupled by means of an RP-2200 or GR-2127 coupling, the rubber jacket must be cut back a sufficient amount to allow for metal-to-metal contact. The resulting joint must then be enclosed in heat-shrinkable tubing (per appendix D), or in a heat-shrinkable sleeve such as the "shrink-around sleeve" made by Sigmaform Corp., or equivalent. Note: The tubing or sleeve may also be used to cover damaged rubber jacket, providing the conduit itself is undamaged.

b. End-fittings: As with couplings, the rubber jacket must be cut back to allow for metal-to-metal contact between conduit and fitting. If insulation is required the assembly should be covered with the heat-shrinkable tubing or sleeve mentioned above.

3.4.7 Selection of Flexible Conduit Size

The following paragraphs are presented as an aid in selecting the appropriate size flexible conduit for shielding a particular cable.

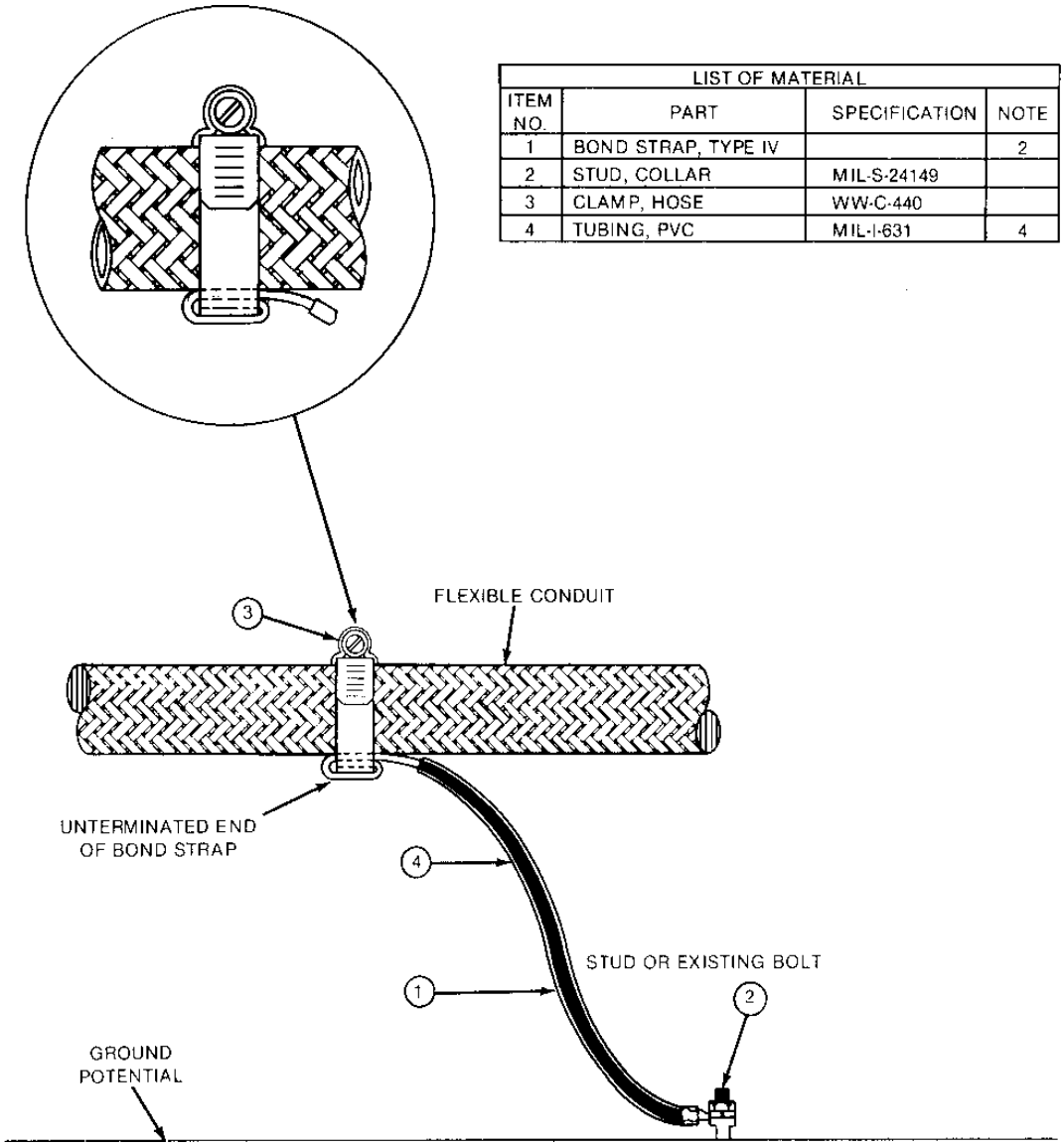

LIST OF MATERIAL			
ITEM NO.	PART	SPECIFICATION	NOTE
1	BOND STRAP, TYPE IV		2
2	STUD, COLLAR	MIL-S-24149	
3	CLAMP, HOSE	WW-C-440	
4	TUBING, PVC	MIL-I-631	4

Notes:

1. GROUNDING METHOD IAW MIL-STD 1310 (NAVY).
2. BOND STRAP SHALL BE TYPE IV EXCEPT ONE END SHALL NOT HAVE PROVISIONS FOR STUD OR BOLT MOUNTING. AREA WHERE BOND STRAP IS HELD AGAINST CONDUIT SHALL BE CLEAR AND FREE OF ANY NONCONDUCTIVE MATERIALS.
3. ALL BOND STRAP CONTACT AREAS SHALL BE COATED WITH ANTISEIZE COMPOUND OF MIL-T-22361.
4. BOND STRAPS MAY BE ENCASED IN CLEAR PLASTIC PVC TUBING.

Figure 3-1. Method of Grounding Flexible Conduit

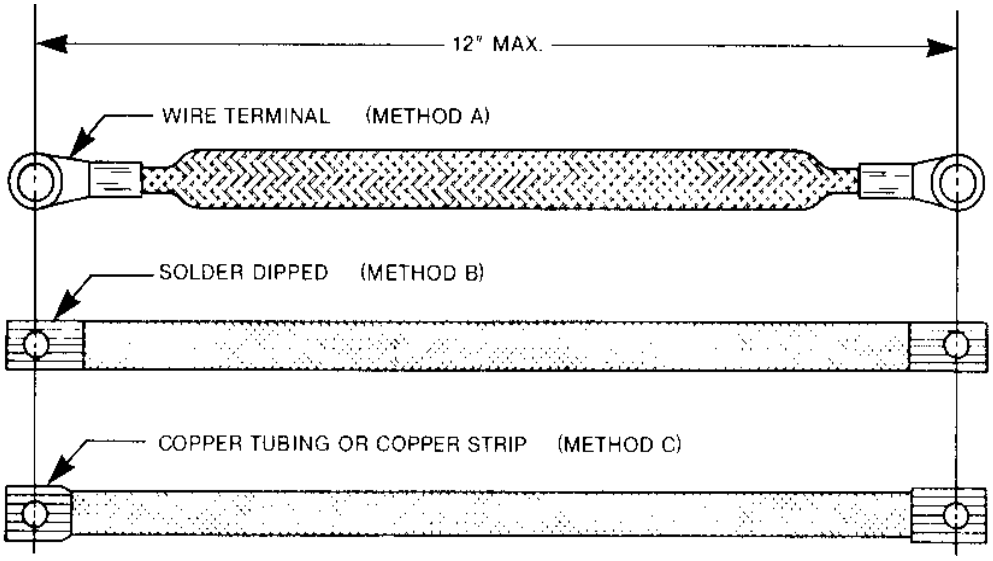

Notes:

1. TYPE IV BONDING STRAPS FABRICATED IAW MIL-STD 1310 (NAVY).
2. TYPE IV BONDING STRAPS FABRICATED FROM FLAT COPPER BRAID (1/2" MIINIMUM WIDTH) OF QQ-B-575. PROVISIONS FOR INSTALLATION OF THE BRAID STRAP SHALL BE BY ONE OF THE FOLLOWING METHODS:
   A. BY INSTALLING WIRE TERMINALS ON EACH END OF THE BRAID.
   B. BY SOLDER DIPPING THE ENDS OF THE BRAID THEN DRILLING MOUNTING HOLES.
   C. BY SOLDERING FLAT COPPER TUBING OR STRIPS ON EACH END OF THE BRAID THEN DRILLING MOUNTING HOLES.

Figure 3-2. Type IV Bond Strap Fabrication Details

a. It should be noted that conduit supplied in long lengths is made up of several short lengths joined together by welding or brazing, and the inside diameter (ID) at each joint (or splice) is reduced by a maximum of 0.028 inches. This reduction is caused by a coupling ring (maximum wall thickness of ring = 0.014 inch) used as part of the manufacturer's method of joining conduit. If the 0.028 inch reduction in diameter at each joint will cause a clearance problem between a cable outside diameter (OD) and the intended conduit size, then the intended conduit is, obviously, too small.

Table 3-1 contains the 11 sizes of conduit specified in appendix D, the conduit ID (minimum), and the minimum ID at a conduit joint.

Table 3-1. Conduit Dimensions (Inches)

Conduit Size (nom ID)	Conduit ID (min)	ID at Joint (min) (conduit ID minus 0.028)
1/4	0.245	0.217
3/8	0.370	0.342
1/2	0.495	0.467
5/8	0.620	0.592
3/4	0.745	0.717
1	0.995	0.967
1-1/4	1.245	1.217
1-1/2	1.495	1.467
2	1.995	1.967
2-1/2	2.495	2.467
3	2.995	2.967

b. One approach to determining a conduit size is the general rule of thumb used by one of the shipyards, which states that if a cable OD approaches 90 percent of a conduit ID, the next larger size conduit should be selected to facilitate installation. Consider, for example, a cable OD which is 90 percent of a 5/8-inch conduit ID. The same cable in the next larger size conduit (3/4-inch) is 75 percent of the conduit ID. Another example is that of a cable OD which is 90 percent of a 3/4-inch conduit ID. This cable in the next larger size conduit (1-inch) is 67 percent of the conduit ID.

c. In addition to the rule of thumb, the various installation methods of shielding cable, as well as conditions at the installation site, such as length of cable run and number of bends along the run, should be considered in determining the amount of clearance required between cable OD and conduit ID.

For example, one method used where cable has been previously inserted into the conduit elsewhere, is to install the cable and conduit as a unit. Another method involves installing the conduit first, and then pulling the cable through the conduit. This method might be used where the weight and length of a cable/conduit unit would cause handling difficulties. The bend radius of the cable and the number of bends should be considered in determining the required clearance. This method would normally require more clearance than the previous method. A cable shielded in this manner can also be readily replaced, if necessary.

Another method of shielding a long cable run, at the installation site, is to use several short lengths of conduit (such as 20 to 30 feet each). The first length of conduit is slipped over the long cable, then a reusable-type conduit-coupling is used to join the

first length of conduit to the second length of conduit. This method of adding couplings and conduit is continued until the entire cable run is shielded.

d. Because of the variables present in the installation of cable and conduit, as mentioned above, there is no hard and fast rule for determining conduit size for a particular cable. However, the goal should be to use the smallest conduit that will satisfy all the necessary requirements for clearance between cable and conduit.

3.5 FLEXIBLE CONDUIT PREPARATION

The following instructions specify preinstallation procedures for flexible shielding conduit.

3.5.1 Cleaning Flexible Conduit

The flexible metal conduit is both air and liquid tight. Prior to shipment from the manufacturer, the inner and outer surfaces of the flexible metal conduit are cleaned to remove oil and foreign matter, the ends are capped, and the conduit is coiled and wrapped in rust inhibitor paper or sealed in a plastic bag, which should not be removed until the conduit is needed for assembly.

If Type 1 or Type 2 conduit becomes contaminated by oil or foreign matter, it should be recleaned by any process or combination of processes which will accomplish thorough cleaning without damage to the metal or the rubber jacket. Also, any drying procedure shall not be injurious to the metal or the rubber jacket.

3.5.2 Forming Flexible Conduit

Due to the tight braid construction of the conduit, it should be formed into the approximate contour of its intended run before cutting. This will ensure the flexibility desired for the installation.

3.5.3 Cutting Flexible Conduit

a. Prior to cutting Type 1 conduit, the braid in the area where the cut is to be made should be silver-soldered or brazed to prevent flaring of the braid during and after the cut (see figure 3-3). Where brazing is not feasible, the area should be covered tightly with an appropriate tape during cutting.

WARNING

Silver-brazing alloy contains cadmium, and poisonous fumes may be formed on heating. Do not breathe fumes. Use only with an adequate ventilation device, such as a fume collector, exhaust ventilator, or air-supplied respirator.

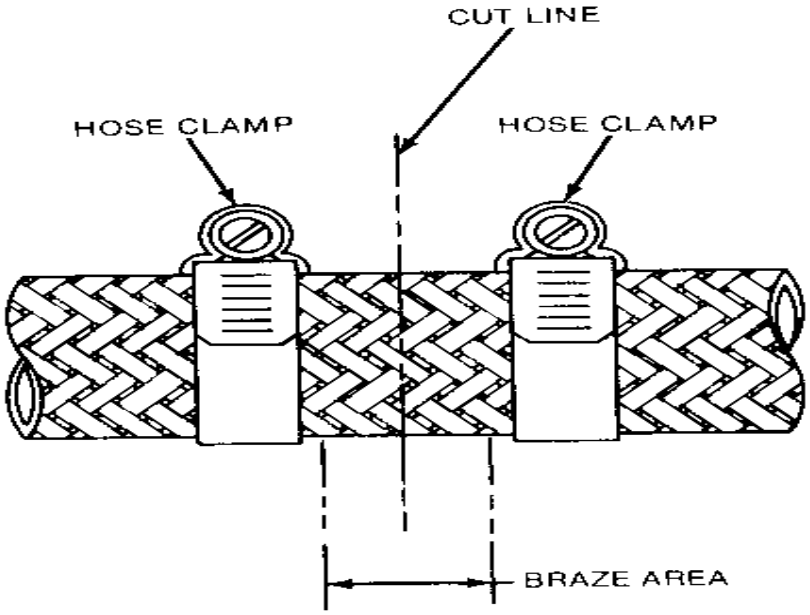

Notes:

1. ATTACH A HOSE CLAMP TO EITHER SIDE OF THE AREA TO BE BRAZED OR SILVER SOLDERED. THESE HOSE CLAMPS HOLD THE BRAID FIRMLY AGAINST THE CONVOLUTED TUBING TO CONTROL THE OD OVER THE BRAID. THEY ALSO ACT AS A HEAT SINK FOR THE CONDUIT.
2. CUT CONDUIT SQUARELY, THEN REMOVE HOSE CLAMPS EITHER BEFORE OR AFTER SMOOTHING THE CONDUIT ENDS.
3. TO PREPARE A CONDUIT END FOR BRAZING OR SILVER SOLDERING, ATTACH A SINGLE HOSE CLAMP AT THE APPROPRIATE DISTANCE FROM THE CONDUIT END.

Figure 3-3. Method of Preparing Conduit for Brazing and Cutting

b. Prior to cutting Type 2 conduit, cut through the rubber jacket around the conduit with an appropriate knife at the point where the final cut through the metal is to be made. Peel back the jacket away from each side of the location of the cut as much as practicable to avoid damage to the jacket caused by heat from silver-soldering or brazing. Silver-solder or braze as in step a above. Where brazing is not feasible, the rubber jacket at the area of the cut should be covered tightly with an appropriate tape during cutting.

c. Cut the conduit squarely with a high speed knife-edge saw or with a hacksaw having a fine-toothed blade.

d. Snip off any loose strands from the braid, and remove all burrs and sharp edges from the inner core of the conduit.

3.5.4 Silver Brazing Fittings to Conduit

Flexible metal conduit can be terminated or coupled by certain steel fittings (listed in this handbook) which are best attached by silver brazing. A silver-base brazing alloy (having 34-36 percent silver), in accordance with Federal Specification WW-B-654, Grade VIII, or equivalent, is recommended. Either a 1/16-inch or a 1/8-inch diameter rod, determined by conduit size, should be adequate for all joints. The brazing flux (a white, water-soluble paste), in accordance with Federal Specification 0-F-499, Type B, or equivalent, is recommended for use with the above-mentioned brazing rod.

WARNING

Silver-brazing alloy contains cadmium, and poisonous fumes may be formed on heating. Do not breathe fumes. Use only with an adequate ventilation device, such as a fume collector, exhaust ventilator, or air-supplied respirator.

Before silver-brazing, all surfaces to be joined must be cleaned. Wash off all grease and oil with a good solvent. The flux should be applied evenly with a brush to the contact surfaces of both the conduit and the fitting.

The oxyacetylene process is preferred for the manual brazing operation, using a neutral to reducing flame. Apply heat to the fitting, never to the braid, until the flux boils, turns a powdery white, and then becomes transparent. Filler rod, which can be prefluxed, is then added starting at the hottest point with the tip of the flame always on the rod or fitting and working around the circumference. Fitting and conduit should be brazed in a vertical position, where practicable, with the fitting below the conduit. After a fillet has been made, the torch flame is played on the fitting uniformly so that the silver braze is drawn into the joint.

After brazing, while the parts are still hot, the flux should be removed by washing in hot water greater than 125°F (the hotter, the better), wiping with a wet swab, brushing with a wet brush, or brushing with a wire brush. Thorough drying after flux removal is required.

It should be noted that while silver-brazing is an approved method for flexible metal conduit to be terminated or coupled, it is not the only method that can be utilized to perform these functions. Low temperature tin lead soldering is an example of another acceptable method that can be used.

SECTION 4

GR2000 SERIES FITTINGS FOR FLEXIBLE CONDUIT (BRAZE-ON TYPE)

Section 4

GR2000-SERIES FITTINGS FOR FLEXIBLE CONDUIT (BRAZE-ON TYPE)

TABLE OF CONTENTS

Paragraph		Page
	LIST OF ILLUSTRATIONS	4-ii
	LIST OF TABLES	4-ii
4.1	BACKGROUND	4-1
4.2	SCOPE	4-1
4.3	APPLICABLE DOCUMENTS	4-1
4.3.1	Issues of Documents	4-1
4.3.2	Other Publications	4-2
4.4	CONSTRUCTION	4-2
4.4.1	Function	4-2
4.4.2	Dimensions	4-3
4.4.2.1	Minimum Wall Thickness	4-3
4.5	MATERIALS	4-3
4.5.1	Components Material	4-3
4.5.2	End-Fitting (GR2126) and Ferrule (GR2129) Material	4-3
4.5.3	Conduit Coupling (GR2127) Material	4-3
4.5.4	Joining Material	4-3
4.5.5	O-ring Gasket Material	4-3
4.5.6	Isolator Adapter (GR2130) Material	4-3
4.6	FINISH	4-4
4.6.1	Finish for Low-Carbon Steel Fittings	4-4
4.6.2	Finish for CRES Fittings	4-4
4.6.3	Finish for Conduit Coupling (GR2127)	4-4
4.7	PERFORMANCE	4-4
4.7.1	Mechanical	4-4
4.7.2	Moisture Sealing	4-4
4.7.3	Cable Protection	4-4
4.7.4	Tensile and Compressive	4-4
4.8	QUALIFICATION	4-4
4.8.1	Qualification	4-4
4.8.2	Application for Qualification	4-5
4.9	DEVIATIONS	4-4
4.10	SOURCES	4-5
4.11	QUALITY ASSURANCE	4-5
4.12	TRANSITION AND ACCESSORY FITTINGS	4-5
4.12.1	Data Sheets	4-5
4.13	ASSEMBLY INSTRUCTIONS, CONDUIT TO GR2125 FITTINGS	4-5

TABLE OF CONTENTS (Continued)

LIST OF ILLUSTRATIONS

Figure		Page
4-1	GR2120 Transition Fitting for MIL-C-5015 Connector	4-6
4-2	GR2121 Enclosure Fitting	4-10
4-3	GR2122 90° Elbow, Non-Environmental (Style A)	4-11
4-4	GR2122 90° Elbow, Environmental (Style B)	4-12
4-5	GR2123 Transition Fitting for Bulkhead Stuffing Tube	4-13
4-6	GR2124 Transition Fitting for MS Series Backshell	4-15
4-7	GR2125 Transition Fitting for Triaxial Connector	4-17
4-8	GR2126 End Fitting for Flexible Conduit	4-19
4-9	GR2127 Conduit Coupling	4-20
4-10	GR2128 Panel Fitting	4-21
4-11	GR2129 Ferrule and Coupling Nut for Flexible Conduit	4-22
4-12	GR2130 Isolator Adapter	4-23
4-13	Assembly Instructions - Flexible Conduit to Triaxial Connector using a GR2125 Transition Fitting	4-25

LIST OF TABLES

Table		Page
4-1	GR2000-Series Transition and Accessory Fittings	4-6

Section 4

GR2000-SERIES FITTINGS FOR FLEXIBLE CONDUIT (BRAZE-ON TYPE)

4.1 BACKGROUND

The original specification and drawings for the GR2000-Series fittings appeared in appendix 2 and section 5, respectively, of NAVSHIPS 0967-283-5010, dated 15 October 1969. These original fittings were designed to fit the flexible shielding conduit described in appendix 1 of the same document which did not specify a standard outside diameter dimension for each size of conduit. As a result, the outside diameter varied with each manufacturer, thus requiring several sizes of fitting to accommodate each nominal size of conduit.

4.2 SCOPE

This specification describes GR2000-Series transition fittings and accessory fittings to be used on the flexible metal shielding conduit specified in appendix D, in which the dimension of the outside diameter for each nominal size of conduit is standardized.

The use of the GR2000-Series or the RP2000-Series fittings (described in section 5) is optional. However, for most installations the RP2000-Series fittings are preferred because they require no brazing for installation on the conduit, and a greater selection of adapters is available.

4.3 APPLICABLE DOCUMENTS

4.3.1 Issues of Documents

The following documents, of the issue in effect on date of invitation for bids or request for proposal, form a part of this specification to the extent specified herein.

SPECIFICATIONS

Federal

QQ-B-650	Brazing Alloy, Copper, Copper-Zinc, and Copper Phosphorous
QQ-P-35	Passivation Treatments for Corrosion-Resisting Steel
QQ-P-416	Plating, Cadmium (Electrodeposited)
QQ-S-763	Steel Bars, Wire, Shapes, and Forgings, Corrosion-Resisting

Military

MIL-P-5516	Packing, Preformed, Petroleum Hydraulic Fuid Resistant, 160:F

STANDARDS

Federal

FED-STD-66	Steel, Chemical Composition, and Hardenability

Military

MIL-STD-129	Marking for Shipment and Storage
MIL-STD-130	Identification Marking of U.S. Military Property

(Copies of specifications, standards, drawings, and publications required by contractors in connection with specific procurement functions should be obtained from the procuring activity or as directed by the contracting officer.)

4.3.2 Other Publications

The following documents form a part of this specification to the extent specified herein. Unless otherwise indicated, the issue in effect on date of invitation for bids or request for proposal shall apply.

American Society for Testing and Materials (ASTM)

SAE AMS 2404C	Electroless Nickel Plating

National Bureau of Standards

Handbook H28	Screw-Thread Standards for Federal Services (Parts I & II)

4.4 CONSTRUCTION

4.4.1 Function

A transition fitting provides the physical connection between flexible metal conduit and an electrical connector or fitting. An accessory fitting provides the physical connection between flexible conduit and a bulkhead or panel, and provides the means for coupling two lengths of conduit together.

This type of transition fitting requires the use of a stainless-steel cylindrical end-fitting which is brazed directly to the braid of the flexible conduit. The other components of the transition fitting are then attached to the end-fitting with a ferrule which operates by friction. The assembly is made watertight by O-ring seals.

By comparison, the RP2000-Series reusable fittings (described in section 5) utilize a ferrule which grips the conduit braid directly by friction, and does not provide for a watertight assembly.

4.4.2 Dimensions

All dimensions and tolerances specified on the drawings listed in table 4-1 are mandatory except as noted in paragraph 4.8 (Deviations).

4.4.2.1 Minimum Wall Thickness

The minimum wall thickness for the body of the GR2120, GR2123, GR2124, and GR2125 fittings shall be 1/16 inch.

4.5 MATERIALS

4.5.1 Components Material

All components of the fittings, except for the GR2126 end-fitting and the GR2129 ferrule, shall be made of mild steel, AISI type B1113, or any AISI-type low-carbon, hot- or cold-rolled steels, in accordance with FED-STD-66, having chemical compositions within the following ranges:

Carbon	(C)	0.08% to 0.25% max
Manganese	(Mn)	0.25% to 1.15% max
Phosphorus	(P)	0.04% to 0.12% max
Sulphur	(S)	0.05% to 0.35% max
Lead	(Pb)	0.15% to 0.35% max

4.5.2 End-Fitting (GR2126) and Ferrule (GR2129) Material

The GR2126 end-fitting and GR2129 ferrule shall be made of corrosion-resisting steel (CRES), 300 series, in accordance with QQ-S-763.

4.5.3 Conduit Coupling (GR2127) Material

The GR2127 conduit coupling shall be made of low-carbon steel (see paragraph 4.5.1).

4.5.4 Joining Material

Any joining material shall have the basic alloy content of the parts being joined. Brazing material shall be in accordance with QQ-B-650 for FS class joints.

4.5.5 O-ring Gasket Material

O-ring gaskets that are part of fittings shall be in accordance with MIL-P-5516, Class B.

4.5.6 Isolator Adapter (GR2130) Material

The GR2130 isolator adapter shall be made of nylon (see table 11, figure 4-12).

4.6 FINISH

4.6.1 Finish for Low-Carbon Steel Fittings

Finish for components made of low-carbon steel shall be a nickel coating in accordance with ANSI/ASTM-2404C.

4.6.2 Finish for CRES Fittings

Parts made of 300-Series CRES shall be passivated in accordance with QQ-P-35.

4.6.3 Finish for Conduit Coupling (GR2127)

Finish for GR2127 conduit coupling shall be a cadmium plating in accordance with QQ-P-416, Type I, Class 3.

4.7 PERFORMANCE

4.7.1 Mechanical

The body of a transition fitting shall telescope over the conduit end-fitting (GR2126) to allow room for cable termination. Assembly of parts shall not place any torque or tensile loads on the transition fitting.

4.7.2 Moisture Sealing

Where moisture sealing or splashproof conditions are required, an O-ring gasket of material specified in 4.5.5 shall be provided as part of the transition fitting to seal each critical joint.

Where moisture sealing is not a requirement, O-ring gaskets may be omitted from transition fittings. However, such omission shall not impair the mechanical performance of the assembly.

4.7.3 Cable Protection

The fitting shall have smooth inner surfaces free of sharp burrs or edges that could abrade the insulation or shield of a cable.

4.7.4 Tensile and Compressive

All transition fittings and end-fittings shall withstand, without slippage, a tensile load of 50 pounds applied between fitting and conduit for 1 minute. Also, such fittings shall withstand, without slippage, a compressive load of 50 pounds applied between fitting and conduit for 1 minute.

4.8 QUALIFICATION

4.8.1 Qualification

Manufactures' designs for transition-fittings must be approved by the Navy. Qualification tests are not required for accessory fittings, but they must be manufactured in accordance with this specification. Manufacturers who are interested in having their designs approved should follow the procedure listed below. Samples sent for testing should be addressed to the Naval Undersea Warfare Center, EMC Branch, Code 3431, Newport, RI 02841-1708. Approval of the GR2120, GR2123, GR2124 and GR2125 transition fittings will be based on conformity of the fitting to the characteristics outlined in this specification and on any other factors which may affect intended

performance. The Navy reserves the right to require that sample fittings be made available for testing in all sizes the manufacturer wishes to have approved. No indebtedness between the U.S. Government and any manufacturer will be incurred in connection with these qualification tests. Test samples and drawings shall be shipped prepaid by the manufacturer and will not be returned.

4.8.2 Application for Qualification

Manufacturers shall submit to NUWC, EMC Branch, Code 3431, Newport, RI 02841-1708 a sample 3/4-inch size GR2000-series transition-fitting installed on a 1-foot length of conduit (identified by manufacturers name and part number). In addition, drawings showing construction details of all sizes of the GR2000 transition-fittings shall be submitted. The drawings shall be numbered and dated for reference purposes.

4.9 DEVIATIONS

Deviations from paragraphs 4.5, 4.6, and 4.11 will be considered if shielding performance can be met by modifications of material, finishes, or mechanical design, provided that the form, fit, and function requirements of this specification are met. Samples of such mechanical fittings must be submitted to the Naval Undersea Warfare Center, EMC Branch, Code 3431, Newport, RI 02841-1708 for test and approval. Complete details of all parameters affected by the modification must accompany the sample.

4.10 SOURCES

The GR2120, GR2123, GR2124, and GR2125 transition fittings must be obtained only from the qualified sources listed in the Qualified Products List, appendix C. The other GR2000 Series fittings may be obtained from any source which manufactures them in accordance with this specification.

4.11 QUALITY ASSURANCE

It will be the responsibility of the procuring activity to determine the acceptability of a transition fitting.

4.12 TRANSITION AND ACCESSORY FITTINGS

Table 4-1 lists the transition and accessory fittings used with flexible metal conduit.

4.12.1 Data Sheets

The following data sheets (figures 4-1 through 4-12) form a part of this specification. They include assembly drawings, tables of appropriate data, and part-number development information.

4.13 ASSEMBLY INSTRUCTIONS, CONDUIT TO GR2125 FITTING

The instructions shown in figure 4-13 describe the procedure for terminating flexible metal conduit used for shielding a coaxial cable connected to a triaxial connector. The GR2125 fitting provides the transition between the conduit and the connector. (Dimensions in figure 4-13 are in inches.)

Table 4-1. GR2000-Series Transition and Accessory Fittings

Figure No.	Basic Part No.	DESCRIPTION
4-1	GR2120	Transition Fitting for MIL-C-5015 Connectors
4-2	GR2121	Enclosure Fitting
4-3	GR2122	90° Elbow, Non-Environmental (Style A)
4-4	GR2122	90° Elbow, Environmental (Style B)
4-5	GR2123	Transition Fitting for Bulkhead Stuffing Tube
4-6	GR2124	Transition Fitting for MS Series Backshell
4-7	GR2125	Transition Fitting for Triaxial Connector
4-8	GR2126	End Fitting for Flexible Conduit
4-9	GR2127	Conduit Coupling
4-10	GR2128	Panel Fitting
4-11	GR2129	Ferrule and Coupling Nut for Flexible Conduit
4-12	GR2130	Isolator Adapter

GR2120 Transition Fitting for MIL-C-5015 Connector

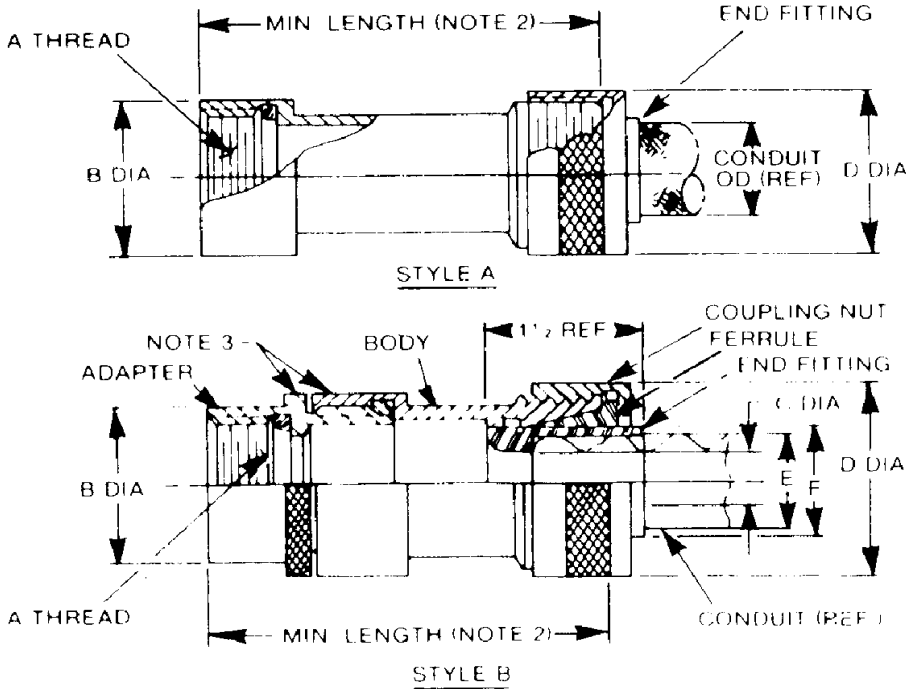

Figure 4-1. GR21120 Transition Fitting for MIL-C-5015 Connector (Sheet 1 of 4)

GR2120 Continued

TABLE I

CONNECTOR		ADAPTER END	
Conn. Shell Size	Conn. Symbol (See Table III)	A Thread Class 2B	B Dia. + 0.010 - 0.020
8S	L	3/8 - 32 UNEF	0.562
8S	H	7/16 - 27 UNS	0.625
8	JMN	7/16 - 28 UNEF	0.625
10S	HJLN	1/2 - 28 UNEF	0.687
10S	M	9/16 - 24 UNEF	0.687
10SL	MN	9/16 - 24 UNEF	0.687
10SL	HJI	7/16 - 28 UNEF	0.812
12S	LN	5/8 - 24 UNEF	0.812
12S	HJM	5/8 - 24 UNEF	0.812
14S	HJLMN	11/16 - 24 UNEF	0.937
16S	HJLMN	3/4 - 20 UNEF	1.062
12	LN	7/8 - 20 UNEF	0.812
12	HM	5/8 - 24 UNEF	0.812
14	HLMN	11/16 - 24 UNS	0.937
16	HJLMN	7/8 - 20 UNEF	1.062
18	HJLMN	1 - 20 UNEF	1.187
20	J	1-1/8 - 24 UNS	1.312
20	HLMN	1-1/8 - 18 UNEF	1.312
22	HJLMN	1-1/4 - 18 UNEF	1.437
24	HJLMN	1-3/8 - 18 UNEF	1.562
28	HJLMN	1-5/8 - 18 UNEF	1.812
32	LMN	1-7/8 - 16 UN	2.062
32	HJ	1-29/32 - 18 UNS	2.062
36	L	2-1/16 - 16 UN	2.312
36	J	2-1/16 - 20 UNEF	2.312
36	MN	2-1/8 - 16 UN	2.312
36	H	2-1/8 - 18 UNS	2.312
40	L	2-5/16 - 16 UN	2.562
40	HMN	2-3/8 - 16 UN	2.562
44	HN	2-5/8 - 16 UN	2.875
48	N	2-13/16 - 18 UNS	3.125
48	H	2-7/8 - 16 UN	3.125

Figure 4-1. GR2120 Transition Fitting for MIL-C-5015 Connector (Sheet 2 of 4)

GR2120 Continued

PART NUMBER DEVELOPMENT

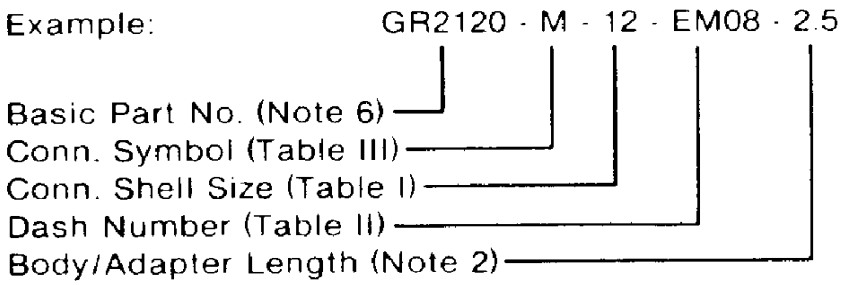

(SEE NOTES ON THE FOLLOWING PAGE)

TABLE II

STANDARD SIZE CONDUIT			TRANSITION FITTING				
			END-FITTING			NUT	
CONDUIT PART NUMBER	CONDUIT SIZE (Nom. ID)	OD (Over Braid)	C Dia.	E +.010 -.000	F .005	D Max.	DASH NO.
EM02	1/4	0.420.01	0.25	0.450	0.530	1.03	EM02
EM03	3/8	0.540.01	0.38	0.570	0.650	1.23	EM03
EM04	1/2	0.690.01	0.50	0.720	0.800	1.36	EM04
EM05	5/8	0.820.01	0.62	0.850	0.930	1.59	EM05
EM06	3/4	0.940.01	0.75	0.970	1.050	1.73	EM06
EM08	1	1.250.01	1.00	1.280	1.360	1.91	EM08
EM10	1-1/4	1.500.01	1.25	1.530	1.610	2.28	EM10
EM12	1-1/2	1.750.01	1.50	1.780	1.860	2.66	EM12
EM16	2	2.280.015	2.00	2.315	2.395	3.17	EM16
EM20	2-1/2	2.780.015	2.50	2.815	2.895	3.97	EM20
EM24	3	3.280.015	3.00	3.315	3.395	4.35	EM24

Figure 4-1. GR2120 Transition Fitting for MIL-C-5015 Connector (Sheet 3 of 4)

GR2120 Continued

Table III

MIL-C-5015 CONNECTOR			
SYMBOL	MFR.	CLASS	DESCRIPTION
H	AMPHENOL	A	MS 3100, MS3101, MS3106, 97-3100, 97-3101, 97-3106
J	AMPHENOL	E,R	MS 3100, MS3101, MS3106, 69-3100, 69-3101, 69-3106
L	BENDIX	A,E,R	MS 3100, MS3101, MS3106, 10-214, 10-720, 10-726
M	CANNON	A	MS 3100, MS3101, MS3106
N	CANNON	E,R	MS 3100, MS3101, MS3106, (CAO1, CAO6)

Notes:

1. MATERIAL: LOW CARBON STEEL WITH ELECTROLESS NICKEL COATING, PER SAE AMS 2404C, EXCEPT END FITTING SHALL BE CRES, 300 SERIES, PASSIVATED.
2. STANDARD MINIMUM LENGTH IS 2 INCHES FOR ONE-PIECE (STYLE A), AND 2.5 INCHES FOR TWO-PIECE (STYLE B).
3. WHEN CONDUIT OD EXCEEDS ID OF CONNECTOR SHELL, A TWO-PIECE FITTING STYLE B), WILL BE SUPPLIED.
4. ASSEMBLY IDENTIFIED PER MIL-STD-130.
5. DISCARD CONNECTOR REAR HARDWARE.
6. BASIC PART NO. WITHOUT O-RING IS GR2120, BASIC PART NO. WITH O-RING IS GRO2120
7. DIMENSIONS IN INCHES.

Figure 4-1. GR2120 Transition Fitting for MIL-C-5015 Connector (Sheet 4 of 4)

GR2121 Enclosure Fitting

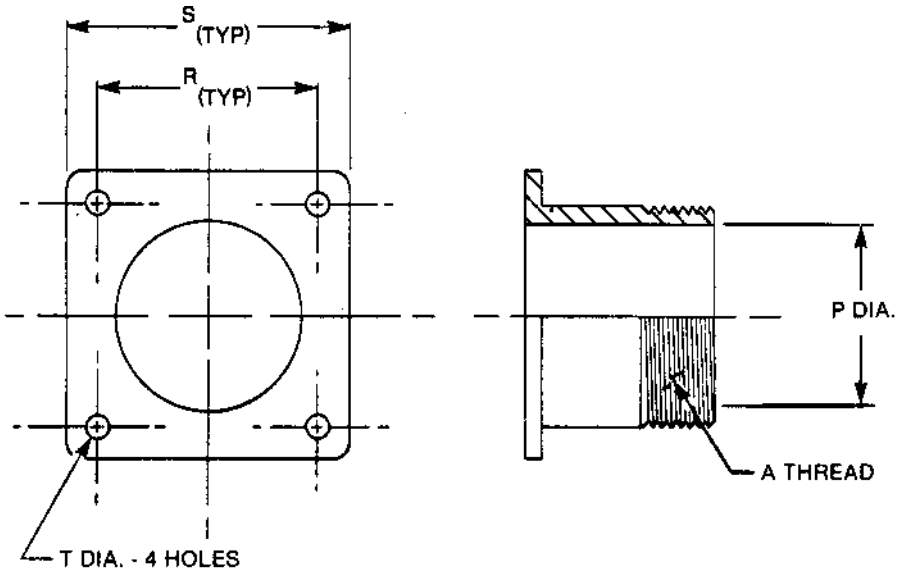

TABLE I

Part Number	Shell Size	A Thread Class 2A	P Dia. Max.	R ±0.005	S Max.	T Dia.
GR2121-8S	8S	1/2 - 28 UNEF	0.364	0.594	0.885	0.120
GR2121-10S	10S	1/2 - 28 UNEF	0.364	0.718	1.005	0.120
GR2121-10SL	10SL	5/8 - 24 NEF	0.443	0.718	1.005	0.120
GR2121-12S	12S	5/8 - 24 NEF	0.443	0.813	1.104	0.120
GR2121-14S	14S	3/4 - 20 UNEF	0.567	0.906	1.198	0.120
GR2121-16S	16S	7/8 - 20 UNEF	0.692	0.968	1.291	0.120
GR2121-18	18	1 - 20 UNEF	0.804	1.062	1.406	0.120
GR2121-20	20	1-3/16 - 18 NEF	0.916	1.156	1.531	0.120
GR2121-22	22	1-3/16 - 18 NEF	0.924	1.250	1.656	0.120
GR2121-24	24	1-7/16 - 18 NEF	1.173	1.375	1.781	0.147
GR2121-28	28	1-7/16 - 18 NEF	1.182	1.562	2.031	0.147
GR2121-32	32	1-3/4 - 18 NS	1.485	1.750	2.281	0.173
GR2121-36	36	2 - 18 NS	1.734	1.937	2.531	0.173
GR2121-40	40	2-1/4 - 16 UN	1.976	2.187	2.781	0.173
GR2121-44	44	2-1/2 - 16 UN	2.235	2.375	3.031	0.173
GR2121-48	48	3 - 16 UN	2.729	2.625	3.281	0.173

Notes:

1. MATERIAL SHALL BE LOW-CARBON STEEL WITH ELECTROLESS NICKEL COATING PER SAE AMS 2404C.
2. ASSEMBLY IDENTIFIED PER MIL-STD-130.
3. DIMENSIONS IN INCHES.
4. ACCORDING TO NBS HANDBOOK H28, THE AMERICAN NATIONAL THREAD SERIES (N) HAS BEEN SUPERSEDED BY THE UNITED THREAD SERIES (UN). THESE INCLUDE THE NEF AND NS THREAD SIZES IN TABLE I WHICH ARE RETAINED FOR USE WITH CONNECTORS HAVING NEF AND NS THREADS.

Figure 4-2. GR2121 Enclosure Fitting

GR2122 90° Elbow, Non-Environmental (Style A)

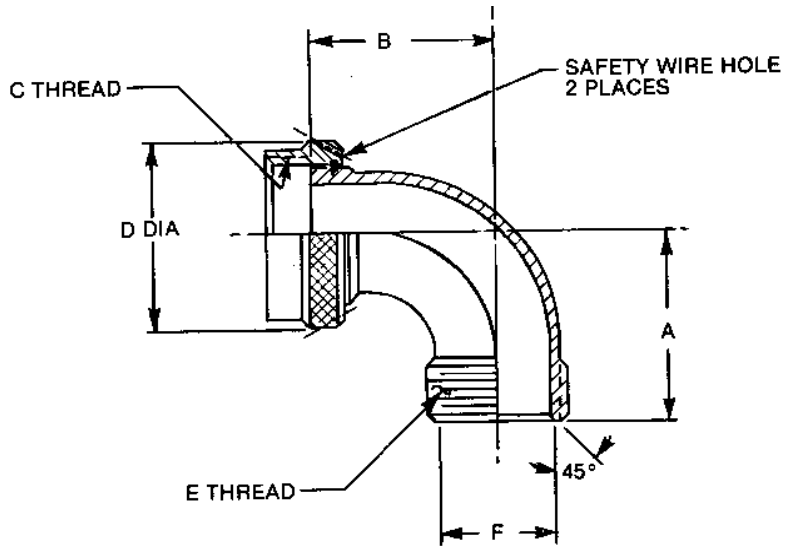

TABLE I

Part Number	Shell Size	A ±0.094	B ±0.094	C Thread Class 2B	D Dia. ±0.010	E Thread Class 2A	F Dia.
GR2122-101	10S	0.735	0.765	1/2 - 28 UNEF	0.722	1/2 - 28 UNEF	0.364
GR2122-121	12S	0.892	0.844	5/8 - 24 UNEF	0.866	5/8 - 24 UNEF	0.490
GR2122-131	12	0.892	0.844	5/8 - 24 UNEF	0.866	5/8 - 24 UNEF	0.490
GR2122-141	14S	1.016	0.968	3/4 - 20 UNEF	1.010	3/4 - 20 UNEF	0.604
GR2122-151	14	1.016	0.968	3/4 - 20 UNEF	1.010	3/4 - 20 UNEF	0.604
GR2122-161	16S	1.173	1.125	7/8 - 20 UNEF	1.155	7/8 - 20 UNEF	0.729
GR2122-171	16	1.173	1.125	7/8 - 20 UNEF	1.155	7/8 - 20 UNEF	0.729
GR2122-181	18	1.391	1.312	1 - 20 UNEF	1.362	1 - 20 UNEF	0.854
GR2122-201	20	1.485	1.406	1-1/8 - 18 UNEF	1.487	1-1/8 - 18 UNEF	0.972
GR2122-202	20	1.485	1.406	1-1/8 - 18 UNEF	1.487	1-3/16 - 18 UNEF	1.034
GR2122-221	22	1.609	1.530	1-1/4 - 18 UNEF	1.612	1-1/4 - 18 UNEF	1.097
GR2122-222	22	1.609	1.530	1-1/4 - 18 UNEF	1.612	1-7/8 - 18 UNEF	1.034
GR2122-241	24	1.798	1.719	1-3/8 - 18 UNEF	1.737	1-3/8 - 18 UNEF	1.222
GR2122-242	24	1.798	1.719	1-3/8 - 18 UNEF	1.737	1-7/16 - 18 UNEF	1.284
GR2122-281	28	2.079	2.016	1-5/8 - 18 UNEF	1.987	1-5/8 - 18 UNEF	1.457
GR2122-282	28	2.263	2.016	1-5/8 - 18 UNEF	1.987	1-7/16 - 18 UNEF	1.284
GR2122-321	32	2.266	2.234	1-7/8 - 16 UN	2.237	1-7/8 - 16 UN	1.738
GR2122-322	32	2.266	2.234	1-7/8 - 16 UN	2.237	1-3/4 - 18 UNEF	1.566
GR2122-361	36	2.610	2.609	2-1/16 - 16 UN	2.425	2-1/16 - 16 UN	1.925
GR2122-362	36	2.610	2.609	2-1/16 - 16 UN	2.425	2 - 18 UNS	1.816
GR2122-401	40	2.625	2.625	2-5/16 - 16 UNS	2.674	2-1/2 - 16 UN	2.174
GR2122-402	40	2.625	2.625	2-3/8 - 16 UN	2.737	2-1/2 - 16 UN	2.174
GR2122-441	44	2.875	2.875	2-5/8 - 16 UN	2.987	2-5/8 - 16 UN	2.424
GR2122-481	48	3.125	3.125	2-13/16 - 18 UNS	3.174	3 - 16 UN	2.674
GR2122-482	48	3.125	3.125	2-7/8 - 16 UN	3.237	3 - 16 UN	2.674

Notes:

1. MATERIAL SHALL BE LOW-CARBON STEEL WITH ELECTROLESS NICKEL COATING PER SAE AMS 2404C.
2. ASSEMBLY IDENTIFIED PER MIL-STD-130.
3. DIMENSIONS IN INCHES.

Figure 4-3. GR2122 90° Elbow, Non-Environmental (Style A)

GR2122 90° Elbow, Non-Environmental (Style B)

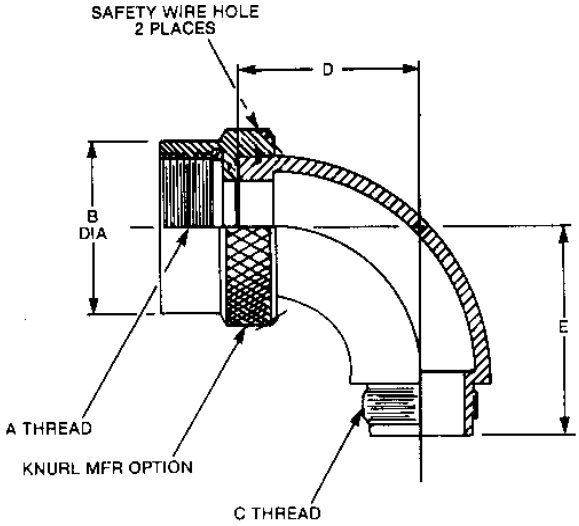

TABLE II

MIL-C-5015 CONNECTOR			
SYMBOL	MFR.	CLASS	SERIES
H	AMPHENOL	A	MS 3100, MS 3106 97-3100, 97-3106
J	AMPHENOL	R	MS 3100, MS 3106 69-3100, 69-3106
L	BENDIX	A	MS 3100, MS 3106
L	BENDIX	E,R	MS 3100, MS 3106 10-214, 10-721, 10-726
M	CANNON	A	MS 3101
N	CANNON	E,R	MS 3100, MS 3106 CA00, CA01, CA06

TABLE I

PART NO.	SHELL SIZE	CONN.	A THREAD CLASS 2B	B DIA.	C THREAD CLASS 2A	D ± .094	E ± .094
GR2122-081E	8S	L	3/8 - 32 UNEF	.562	1/2 - 28 UNEF	1.406	1.609
GR2122-082E	8S	H	7/16 - 27 UNS	.625	1/2 - 28 UNEF	1.406	1.609
GR2122-083E	8S	JMN	7/16 - 28 UNEF	.625	1/2 - 28 UNEF	1.406	1.609
GR2122-101E	10S	HJLN	1/2 - 28 UNEF	.687	1/2 - 28 UNEF	1.406	1.609
GR2122-102E	10S	M	9/16 - 24 UNEF	.687	5/8 - 24 UNEF	1.406	1.609
GR2122-103E	10SL	MN	9/16 - 24 UNEF	.687	5/8 - 24 UNEF	1.406	1.609
GR2122-104E	10SL	HJL	5/8 - 24 UNEF	.812	5/8 - 24 UNEF	1.406	1.609
GR2122-121E	12S	LN	5/8 - 24 UNEF	.812	5/8 - 24 UNEF	1.406	1.609
GR2122-122E	12S	HJM	11/16 - 24 UNEF	.812	3/4 - 20 UNEF	1.406	1.609
GR2122-123E	12SL	H	3/4 - 20 UNEF	.937	3/4 - 20 UNEF	1.406	1.609
GR2122-141E	14S	HJLMN	3/4 - 20 UNEF	.937	3/4 - 20 UNEF	1.406	1.609
GR2122-161E	16S	HJLMN	7/8 - 20 UNEF	1.062	7/8 - 20 UNEF	1.406	1.609
GR2122-132E	12	LN	5/8 - 24 UNEF	.812	5/8 - 20 UNEF	1.406	1.609
GR2122-133E	12	NM	11/16 - 24 UNEF	.812	3/4 - 20 UNEF	1.406	1.609
GR2122-151E	14	HLMN	3/4 - 20 UNEF	.937	3/4 - 20 UNEF	1.406	1.609
GR2122-171E	16	HJLMN	7/8 - 20 UNEF	1.062	7/8 - 20 UNEF	1.406	1.609
GR2122-181E	18	HJLMN	1 - 20 UNEF	1.187	1 - 20 UNEF	1.781	1.984
GR2122-203E	20	J	1-1/8 - 24 UNS	1.312	1-1/8 - 18 UNEF	1.781	1.984
GR2122-201E	20	HLMN	1-1/8 - 18 UNEF	1.312	1-1/8 - 18 UNEF	1.781	1.984
GR2122-221E	22	HJLMN	1-1/4 - 18 UNEF	1.437	1-1/4 - 18 UNEF	2.156	2.359
GR2122-241E	24	HJLMN	1-3/8 - 18 UNEF	1.562	1-3/8 - 18 UNEF	2.156	2.359
GR2122-281E	28	HJLMN	1-5/8 - 18 UNEF	1.812	1-5/8 - 18 UNEF	2.531	2.734
GR2122-321E	32	LMN	1-7/8 - 16 UN	2.062	1-7/8 - 16 UN	3.281	3.484
GR2122-323E	32	HJ	1-29/32 - 18 UNS	2.062	1-7/8 - 16 UN	3.281	3.484
GR2122-361E	36	L	2-1/16 - 16 UN	2.312	2-1/16 - 16 UN	3.281	3.484
GR2122-363E	36	J	2-1/16 - 20 UNEF	2.312	2-1/16 - 16 UN	3.281	3.484
GR2122-364E	36	MN	2-1/8 - 16 UN	2.312	2-1/16 - 16 UN	3.281	3.484
GR2122-365E	36	H	2-1/8 - 18 UNS	2.312	2-1/16 - 16 UN	3.281	3.484
GR2122-403E	40	L	2-5/16 - 16 UN	2.562	2-1/16 - 16 UN	4.031	4.234
GR2122-404E	40	HMN	2-3/8 - 16 UN	2.562	2-1/16 - 16 UN	4.031	4.234
GR2122-442E	44	HNL	2-5/8 - 16 UN	2.875	2-1/16 - 16 UN	4.031	4.234
GR2122-483E	48	N	2-13/16 - 18 UNS	3.125	2-1/16 - 16 UN	4.781	4.984
GR2122-484E	48	H	2-7/8 - 16 UN	3.125	2-1/16 - 16 UN	4.781	4.984

Notes:

1. MATERIAL SHALL BE LOW-CARBON STEEL WITH ELECTROLESS NICKEL COATING PER SAE AMS 2404C.
2. ASSEMBLY IDENTIFIED PER MIL-STD-130.
3. DIMENSIONS IN INCHES.
4. AMPHENOL, BENDIX, AND CANNON “A” CLASS CONNECTORS, AND SHELL SIZE “10SL” OF CANNON “E, R” CLASS CONNECTORS SHOULD NOT BE SELECTED FOR ENVIRONMENTAL ASSEMBLY.

Figure 4-4. GR2122 90° Elbow, Environmental (Style B)

GR2123 Transition Fitting for Bulkhead Stuffing Tube

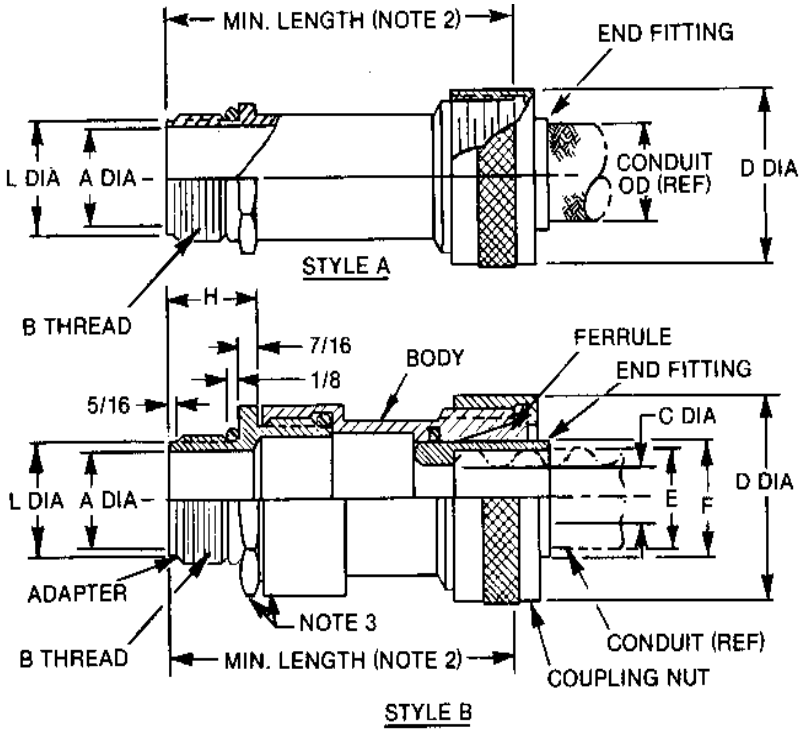

TABLE I

ADAPTER END				
Dash No.	B Thread (Class 2A)	A Dia.	L Dia.	H Dim.
1	1-1/8 - 14 N	0.500	0.875	1-9/16
2	1-1/8 - 12 UN	0.609	0.984	1-9/16
3	1.288 - 14 N	0.750	1.100	1-9/16
4	3/4 - 14 NPSM	0.750	1.100	1-9/16
5	1-5/16 - 12 UN	0.812	1.171	1-9/16
6	1 - 11-1/2 NPSM	1.000	1.171	1-9/16
7	1-1/4 - 11-1/2 NPSM	1.000	1.400	1-9/16
8	1-5/8 - 12 UN	1.062	1.484	1-9/16
9	1-1/4 - 11-1/2 NPSM	1.180	1.500	1-9/16
10	2.025 - 11-1/2 N	1.250	1.650	1-7/8
11	1-13/16 - 12 UN	1.265	1.671	1-7/8
12	2-1/16 - 12 UN	1.437	1.921	2
13	2-1/4 - 11-1/2 N	1.500	1.930	2
14	2-5/16 - 12 UN	1.625	2.173	2-1/8
15	2-11/16 - 12 UN	1.875	2.531	2-5/16
16	2-1/2 - 8 NPSM	2.000	2.600	2-5/16
17	3 - 12 UN	2.187	2.850	2-5/16
18	3-1/8 - 12 UN	2.312	2.968	2-3/8
19	3 - 8 NPSM	2.500	3.000	2-3/8

PART NUMBER DEVELOPMENT

Example: GR2123 - 2 - 3 - EM04

- Basic Part No. (Note 6)
- Dash No. (Table I)
- Body/Adapter Length (Note 2)
- Dash No. (Table II)

(SEE NOTES ON THE FOLLOWING PAGE)

Figure 4-5. GR2123 Transition Fitting for Bulkhead Stuffing Tube (Sheet 1 of 2)

GR2123 Continued

TABLE II

STANDARD SIZE CONDUIT			TRANSITION FITTING				
			END-FITTING			NUT	
CONDUIT PART NUMBER	CONDUIT SIZE (Nom. ID)	OD (Over Braid)	C Dia.	E +.010 -.000	F ±.005	D Max.	DASH NO.
EM02	1/4	0.42±0.01	0.25	0.450	0.530	1.03	EM02
EM03	3/8	0.54±0.01	0.38	0.570	0.650	1.23	EM03
EM04	1/2	0.69±0.01	0.50	0.720	0.800	1.36	EM04
EM05	5/8	0.82±0.01	0.62	0.850	0.930	1.59	EM05
EM06	3/4	0.94±0.01	0.75	0.970	1.050	1.73	EM06
EM08	1	1.25±0.01	1.00	1.280	1.360	1.91	EM08
EM10	1-1/4	1.50±0.01	1.25	1.530	1.610	2.28	EM10
EM12	1-1/2	1.75±0.01	1.50	1.780	1.860	2.66	EM12
EM16	2	2.28±0.015	2.00	2.315	2.395	3.17	EM16
EM20	2-1/2	2.78±0.015	2.50	2.815	2.895	3.97	EM20
EM24	3	3.28±0.015	3.00	3.315	3.395	4.35	EM24

Notes:

1. MATERIAL SHALL BE LOW-CARBON STEEL WITH ELECTROLESS NICKEL COATING PER SAE AMS 2404C EXCEPT END FITTING SHALL BE CRES, 300 SERIES, PASSIVATED.
2. STANDARD MINIMUM LENGTH IS 3 INCHES FOR ONE-PIECE (STYLE A), AND 3.5 INCHES FOR TWO-PIECE (STYLE B).
3. WHEN CONDUIT OD EXCEEDS “A” DIAMETER, A TWO-PIECE (STYLE B) WILL BE SUPPLIED.
4. ASSEMBLY IDENTIFIED PER MIL-STD-130.
5. DISCARD STUFFING-TUBE GLAND NUT.
6. BASIC PART NO. WITHOUT O-RINGS IS GR2123
   BASIC PART NO. WITH O-RINGS IS GRO2123
7. DIMENSIONS IN INCHES.
8. THE AMERICAN NATIONAL THREAD SERIES (N) HAS BEEN SUPERSEDED BY THE UNITED THREAD SERIES (UN). THE “N” THREAD SIZES LISTED IN TABLE I ARE RETAINED FOR USE WITH THOSE ITEMS WHICH HAVE “N” THREADS.

Figure 4-5. GR2123 Transition Fitting for Bulkhead Stuffing Tube (Sheet 2 of 2)

GR2124 Transition Fitting for MS Series Backshell

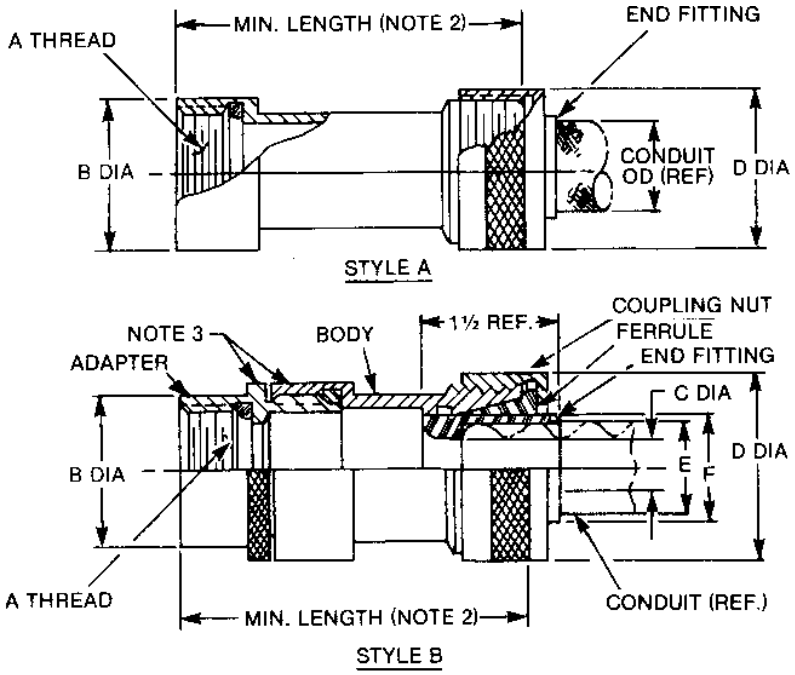

TABLE I

BACKSHELL SIZE	ADAPTER END DASH NO.	ADAPTER END A THREAD CLASS 2B	ADAPTER END B DIA. +0.010 −0.020
8S, 10S	3	1/2 - 28 UNEF	0.625
10SL, 12, 12S	4	5/8 - 24 UNEF	0.750
12SL, 14, 14S	6	3/4 - 20 UNEF	0.875
16, 16S	8	7/8 - 20 UNEF	1.000
18	10	1 - 20 UNEF	1.125
20, 22	12	1-3/16 - 18 UNEF	1.312
24, 28	16	1-7/16 - 18 UNEF	1.562
32	20	1-3/4 - 18 UNS	1.875
36	24	2 - 18 UNS	2.125
40	28	2-1/4 - 16 UN	2.375
44	32	2-1/2 - 16 UN	2.625
48	40	3 - 16 UN	3.125

PART NUMBER DEVELOPMENT

Example: GR2124 - 3 - EM02 - 2.5

- Basic Part No. (Note 5)
- Dash No. (Table I)
- Dash No. (Table II)
- Body/Adapter Length (Note 2)

(SEE NOTES ON THE FOLLOWING PAGE)

Figure 4-6. GR2124 Transition Fitting for MS Series Backshell (Sheet 1 of 2)

GR2124 Continued

TABLE II

STANDARD SIZE CONDUIT			TRANSITION FITTING				
			END-FITTING			NUT	
CONDUIT PART NUMBER	CONDUIT SIZE (Nom. ID)	OD (Over Braid)	C Dia.	E +.010 -.000	F ±.005	D Max.	DASH NO.
EM02	1/4	0.42±0.01	0.25	0.450	0.530	1.03	EM02
EM03	3/8	0.54±0.01	0.38	0.570	0.650	1.23	EM03
EM04	1/2	0.69±0.01	0.50	0.720	0.800	1.36	EM04
EM05	5/8	0.82±0.01	0.62	0.850	0.930	1.59	EM05
EM06	3/4	0.94±0.01	0.75	0.970	1.050	1.73	EM06
EM08	1	1.25±0.01	1.00	1.280	1.360	1.91	EM08
EM10	1-1/4	1.50±0.01	1.25	1.530	1.610	2.28	EM10
EM12	1-1/2	1.75±0.01	1.50	1.780	1.860	2.66	EM12
EM16	2	2.28±0.015	2.00	2.315	2.395	3.17	EM16
EM20	2-1/2	2.78±0.015	2.50	2.815	2.895	3.97	EM20
EM24	3	3.28±0.015	3.00	3.315	3.395	4.35	EM24

Notes:

1. MATERIAL SHALL BE LOW-CARBON STEEL WITH ELECTROLESS NICKEL COATING PER SAE AMS 2404C EXCEPT END FITTING SHALL BE CRES, 300 SERIES, PASSIVATED.
2. STANDARD MINIMUM LENGTH IS 2 INCHES FOR ONE-PIECE (STYLE A), AND 2.5 INCHES FOR TWO-PIECE (STYLE B).
3. WHEN CONDUIT OD EXCEEDS ID OF CONNECTOR SHELL, A TWO-PIECE (STYLE B) WILL BE SUPPLIED.
4. ASSEMBLY IDENTIFIED PER MIL-STD-130.
5. BASIC PART NO. WITHOUT O-RINGS IS GR2124
   BASIC PART NO. WITH O-RINGS IS GRO2124
6. DIMENSIONS IN INCHES.

Figure 4-6. GR2124 Transition Fitting for MS Series Backshell (Sheet 2 of 2)

GR2125 Transition Fitting for Triaxial Connector

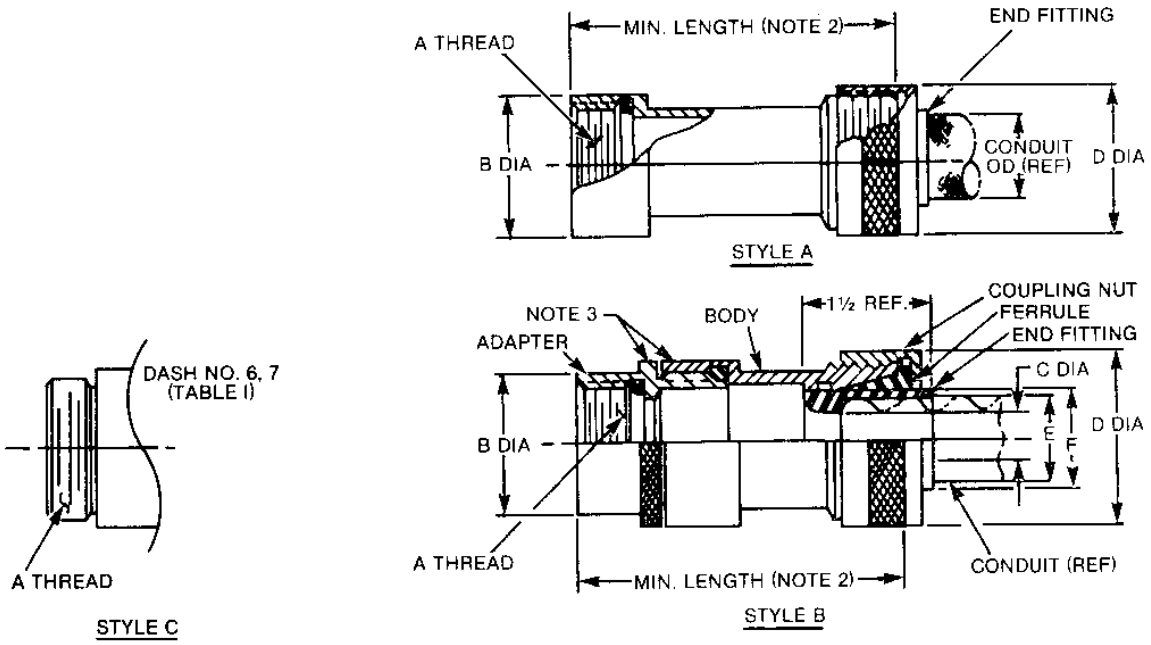

TABLE I

ADAPTER END			CONNECTOR PART NO.		CABLE TYPE	CONDUIT SIZE (NOM)
DASH NO.	A THREAD	B DIA	ITT/CANNON	(FORMERLY) GREMAR		
4	3/4 - 16 UNF-2B	0.875	152105-2380	5633	RG-223/U RG-58C/U	1/4
5	7/8 - 20 UNEF-2B	1.062	152100-2390	7991	RG-214A/U RG-9B/U	1/2
6	1-1/16 - 18 UNEF-2A	1.187	152190-0000	16312	RG-14A/U RG-293A/U	3/4
7	1-1/16 - 18 UNEF-2A	1.187		11865	RG-17A/U	1

PART NUMBER DEVELOPMENT

Example: GR2125 - 4 - EM02 - 2.5

- Basic Part No. (Note 5)
- Dash No. (Table I)
- Dash No. (Table II)
- Body/Adapter Length (Note 2)

(SEE NOTES ON THE FOLLOWING PAGE)

Figure 4-7. GR2125 Transition Fitting for Triaxial Connector (Sheet 1 of 2)

GR2125 Continued

TABLE II

STANDARD SIZE CONDUIT			TRANSITION FITTING				
			END-FITTING			NUT	
CONDUIT PART NUMBER	CONDUIT SIZE (Nom. ID)	OD (Over Braid)	C Dia.	E +.010 -.000	F ±.005	D Max.	DASH NO.
EM02	1/4	0.42±0.01	0.25	0.450	0.530	1.03	EM02
EM03	3/8	0.54±0.01	0.38	0.570	0.650	1.23	EM03
EM04	1/2	0.69±0.01	0.50	0.720	0.800	1.36	EM04
EM05	5/8	0.82±0.01	0.62	0.850	0.930	1.59	EM05
EM06	3/4	0.94±0.01	0.75	0.970	1.050	1.73	EM06
EM08	1	1.25±0.01	1.00	1.280	1.360	1.91	EM08
EM10	1-1/4	1.50±0.01	1.25	1.530	1.610	2.28	EM10
EM12	1-1/2	1.75±0.01	1.50	1.780	1.860	2.66	EM12
EM16	2	2.28±0.015	2.00	2.315	2.395	3.17	EM16
EM20	2-1/2	2.78±0.015	2.50	2.815	2.895	3.97	EM20
EM24	3	3.28±0.015	3.00	3.315	3.395	4.35	EM24

Notes:

1. MATERIAL SHALL BE LOW-CARBON STEEL WITH ELECTROLESS NICKEL COATING PER SAE AMS 2404C EXCEPT END FITTING SHALL BE CRES, 300 SERIES, PASSIVATED.
2. STANDARD MINIMUM LENGTH IS 2 INCHES FOR ONE-PIECE (STYLE A), AND 2.5 INCHES FOR TWO-PIECE (STYLE B).
3. WHEN CONDUIT OD EXCEEDS ID OF CONNECTOR SHELL, A TWO-PIECE (STYLE B OR C) WILL BE SUPPLIED.
4. ASSEMBLY IDENTIFIED PER MIL-STD-130.
5. BASIC PART NO. WITHOUT O-RINGS IS GR2125
   BASIC PART NO. WITH O-RINGS IS GRO2125
6. DIMENSIONS IN INCHES.

Figure 4-7. GR2125 Transition Fitting for Triaxial Connector (Sheet 2 of 2)

GR2126 End Fitting for Flexible Conduit

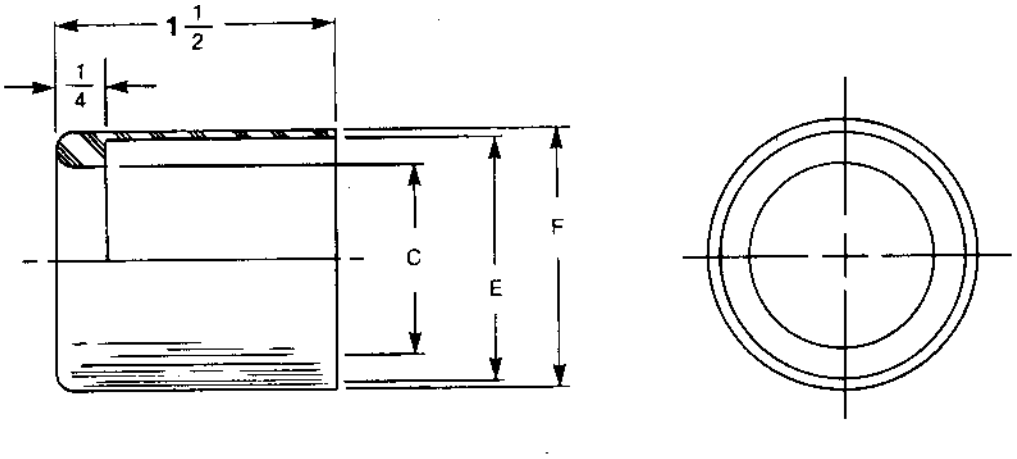

TABLE I

STANDARD SIZE CONDUIT			END FITTING			
CONDUIT PART NUMBER	CONDUIT SIZE (Nom. ID)	OD (Over Braid)	C Dia.	E +.010 −.000	F ±.005	END FITTING PART NUMBER
EM02	1/4	0.42 ± 0.01	0.25	0.450	0.530	GR2126-EM02
EM03	3/8	0.54 ± 0.01	0.38	0.570	0.650	GR2126-EM03
EM04	1/2	0.69 ± 0.01	0.50	0.720	0.800	GR2126-EM04
EM05	5/8	0.82 ± 0.01	0.62	0.850	0.930	GR2126-EM05
EM06	3/4	0.94 ± 0.01	0.75	0.970	1.050	GR2126-EM06
EM08	1	1.25 ± 0.01	1.00	1.280	1.360	GR2126-EM08
EM10	1-1/4	1.50 ± 0.01	1.25	1.530	1.610	GR2126-EM10
EM12	1-1/2	1.75 ± 0.01	1.50	1.780	1.860	GR2126-EM12
EM16	2	2.28 ± 0.015	2.00	2.315	2.395	GR2126-EM16
EM20	2-1/2	2.78 ± 0.015	2.50	2.815	2.895	GR2126-EM20
EM24	3	3.28 ± 0.015	3.00	3.315	3.395	GR2126-EM24

Notes:

1. MATERIAL SHALL BE CRES, 300 SERIES, PASSIVATED.
2. IDENTIFY PER MIL-STD-130.
3. DIMENSIONS IN INCHES.

Figure 4-8. GR2126 End Fitting for Flexible Conduit

GR2127 Conduit Coupling

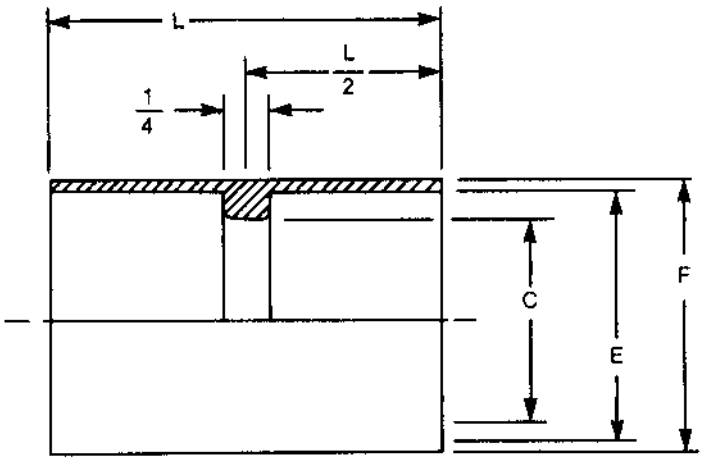

STANDARD SIZE CONDUIT			CONDUIT COUPLING			
CONDUIT PART NUMBER	CONDUIT SIZE (Nom. ID)	OD (Over Braid)	C DIA.	E +.010 −.000	F ±.005	L ±.093
EM02	1/4	0.42 ± 0.01	0.25	0.450	0.530	1.25
EM03	3/8	0.54 ± 0.01	0.38	0.570	0.650	1.37
EM04	1/2	0.69 ± 0.01	0.50	0.720	0.800	1.50
EM05	5/8	0.82 ± 0.01	0.62	0.850	0.930	1.62
EM06	3/4	0.94 ± 0.01	0.75	0.970	1.050	1.75
EM08	1	1.25 ± 0.01	1.00	1.280	1.360	2.00
EM10	1-1/4	1.50 ± 0.01	1.25	1.530	1.610	2.12
EM12	1-1/2	1.75 ± 0.01	1.50	1.780	1.860	2.25
EM16	2	2.28 ± 0.015	2.00	2.315	2.395	2.50
EM20	2-1/2	2.78 ± 0.015	2.50	2.815	2.895	2.75
EM24	3	3.28 ± 0.015	3.00	3.315	3.395	3.00

Notes:

1. MATERIAL: LOW CARBON STEEL WITH CADMIUM PLATING PER QQ-P-416.
2. IDENTIFY PER MIL-STD-130.
3. DIMENSIONS IN INCHES.

PART NUMBER DEVELOPMENT

Example:

Basic Part No.	GR2127-EM06
Conduit Part No. (See Table)	EM06

Figure 4-9. GR2127 Conduit Coupling

GR2128 Panel Fitting

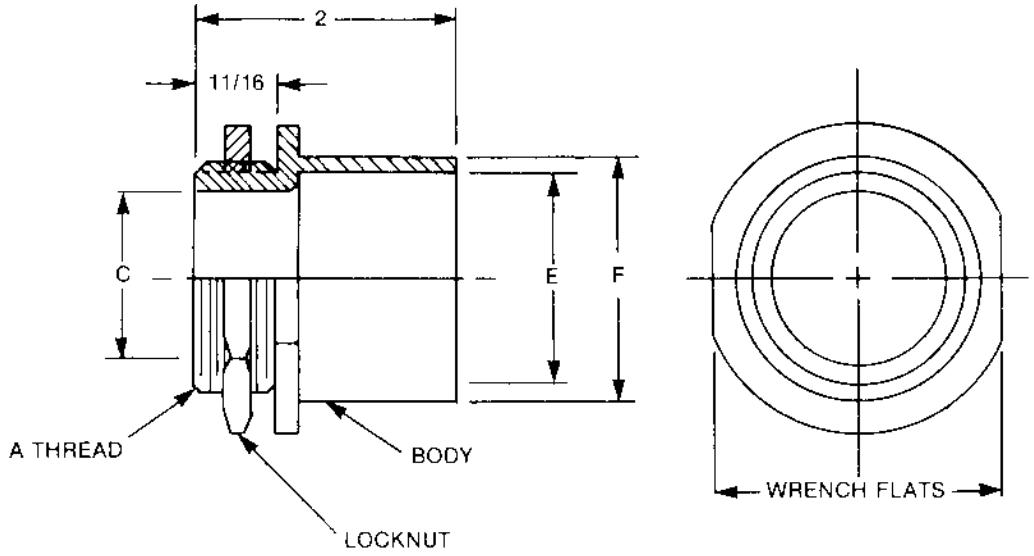

STANDARD SIZE CONDUIT			PANEL FITTING				
CONDUIT PART NUMBER	CONDUIT SIZE (Nom. ID)	OD (Over Braid)	A THREAD CLASS 2A	C Dia.	E +.010 -.000	F ±.005	PANEL FITTING PART NO.
EM02	1/4	0.42 ± 0.01	0.625-24 UNEF	0.25	0.450	0.530	GR2128-EM02
EM03	3/8	0.54 ± 0.01	0.750-20 UNEF	0.38	0.570	0.650	GR2128-EM03
EM04	1/2	0.69 ± 0.01	0.875-20 UNEF	0.50	0.720	0.800	GR2128-EM04
EM05	5/8	0.82 ± 0.01	1.000-20 UNEF	0.62	0.850	0.930	GR2128-EM05
EM06	3/4	0.94 ± 0.01	1.1875-18 UNEF	0.75	0.970	1.050	GR2128-EM06
EM08	1	1.25 + 0.01	1.4375-18 UNEF	1.00	1.280	1.360	GR2128-EM08
EM10	1-1/4	1.50 + 0.01	1.750-18 UNS	1.25	1.530	1.610	GR2128-EM10
EM12	1-1/2	1.75 ± 0.01	2.000-18 UNS	1.50	1.780	1.860	GR2128-EM12
EM16	2	2.28 + 0.015	2.500-16 UN	2.00	2.315	2.395	GR2128-EM16
EM20	2-1/2	2.78 + 0.015	3.000-16 UN	2.50	2.815	2.895	GR2128-EM20
EM24	3	3.28 + 0.015	3.500-16 UN	3.00	3.315	3.395	GR2128-EM24

Notes:

1. BODY MATERIAL SHALL BE CRES, 300 SERIES PASSIVATED.
2. LOCKNUT MATERIAL SHALL BE LOW-CARBON STEEL WITH ELECTROLESS NICKEL COATING PER SAE AMS 2404C.
3. IDENTIFY PER MIL-STD-130.
4. DIMENSIONS IN INCHES.

Figure 4-10. GR2128 Panel Fitting

GR2129 Ferrule and Coupling Nut for Flexible Conduit

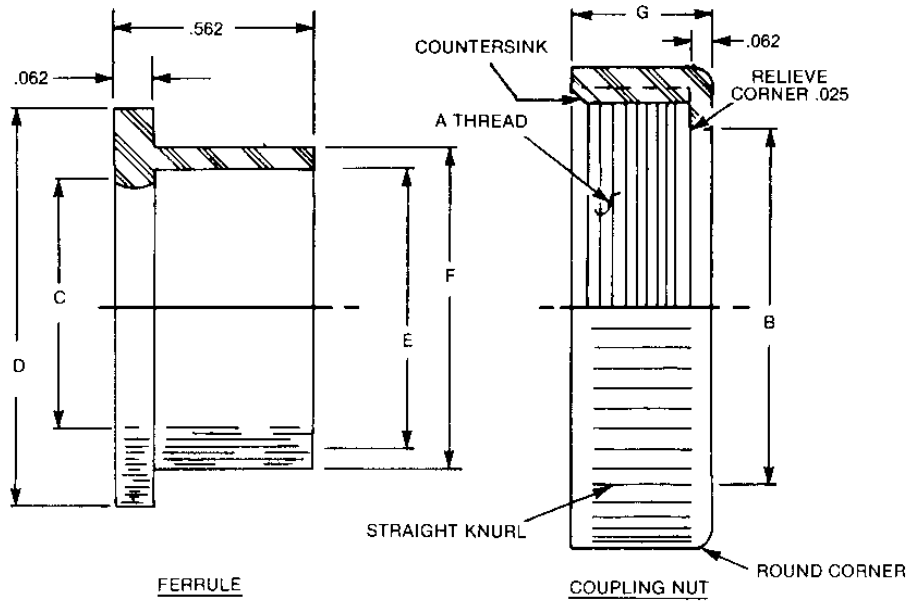

STANDARD SIZE CONDUIT			FERRULE AND COUPLING NUT ASSEMBLY							
			FERRULE				COUPLING NUT			
CONDUIT PART NUMBER	CONDUIT SIZE (Nom. ID)	OD (Over Braid)	C Dia.	E +.010 −.000	F ±.005	D ±.010	A THREAD CLASS 2B	B ±.005	G ±.015	ASSEMBLY PART NUMBER
EM02	1/4	0.42 ± 0.01	0.25	0.450	0.530	0.635	0.750-20 UNEF	0.545	0.438	GR2129-EM02
EM03	3/8	0.54 ± 0.01	0.38	0.570	0.650	0.760	0.875-20 UNEF	0.665	0.438	GR2129-EM03
EM04	1/2	0.69 ± 0.01	0.50	0.720	0.800	0.906	1.000-20 UNEF	0.815	0.438	GR2129-EM04
EM05	5/8	0.82 ± 0.01	0.62	0.850	0.930	1.072	1.188-18 UNEF	0.945	0.438	GR2129-EM05
EM06	3/4	0.94 ± 0.01	0.75	0.970	1.050	1.322	1.438-18 UNEF	1.065	0.438	GR2129-EM06
EM08	1	1.25 ± 0.01	1.00	1.280	1.360	1.635	1.750-18 NS	1.375	0.500	GR2129-EM08
EM10	1-1/4	1.50 ± 0.01	1.25	1.530	1.610	1.885	2.000-18 NS	1.625	0.562	GR2129-EM10
EM12	1-1/2	1.75 ± 0.01	1.50	1.780	1.860	2.135	2.250-16 UN	1.875	0.562	GR2129-EM12
EM16	2	2.28 ± 0.015	2.00	2.315	2.395	2.885	3.000-16 UN	2.410	0.688	GR2129-EM16
EM20	2-1/2	2.78 ± 0.015	2.50	2.815	2.895	3.260	3.375-16 UN	2.910	0.688	GR2129-EM20
EM24	3	3.28 ± 0.015	3.00	3.315	3.395	3.760	3.875-16 UN	3.410	0.750	GR2129-EM24

Notes:

1. FERRULE MATERIAL SHALL BE CRES, 300 SERIES, PASSIVATED.
2. COUPLING NUT SHALL BE LOW-CARBON STEEL WITH ELECTROLESS NICKEL COATING PER SAE AMS 2404C.
3. THE “A” THREADS TO BE PERFECT TO WITHIN 0.094 INCHES FROM BOTTOM. NO THREAD RELIEF AT INNER END PERMITTED.
4. IDENTIFY PER MIL-STD-130.
5. DIMENSIONS IN INCHES.
6. THE AMERICAN NATIONAL THREAD SERIES (N) HAS BEEN SUPERSEDED BY THE UNITED THREAD SERIES (UN). THE “NS” THREAD SIZES LISTED IN TABLE I ARE RETAINED FOR USE WITH THOSE ITEMS WHICH HAVE “NS” THREADS.
7. THE GR2129-EM06 ASSEMBLY COUPLES 3/4-INCH CONDUIT TO THE STUFFING-TUBE ADAPTER, FIGURE 7-11 IN SECTION 7.

Figure 4-11. GR2129 Ferrule and Coupling Nut for Flexible Circuit

GR2130 Isolator Adapter

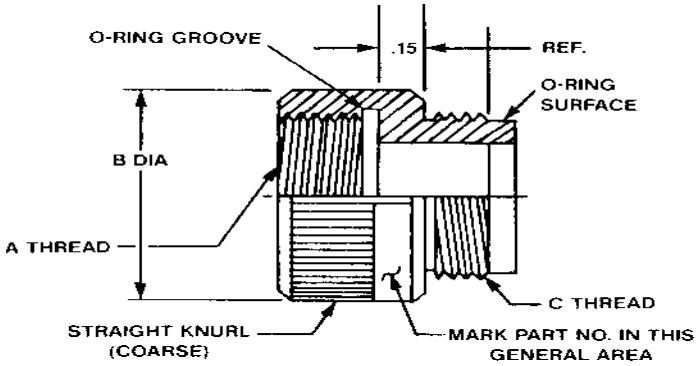

TABLE I

BASIC	MATES WITH GR 2000 SERIES							A THREAD	B DIA	C THREAD
PART NO	2120	2121	2122	2123	2124	2125	2129	CLASS 2B	± .02	CLASS 2A
GR2130-01	√		√					3/8-32 UNEF	0.69	3/8-32 UNEF
GR2130-02	√		√					7/16-27 UNS	0.75	7/16-27 UNS
GR2130-03	√		√					7/16-28 UNS	0.75	7/16-28 UNS
GR2130-04	√	√	√		√			1/2-28 UNEF	0.82	1/2-28 UNEF
GR2130-05	√		√					9/16-24 UNEF	0.88	9/16-24 UNEF
GR2130-06	√	√	√		√			5/8-24 UNEF	0.94	5/8-24 UNEF
GR2130-07	√		√					11/16-24 UNEF	1.00	11/16-24 UNEF
GR2130-08						√		3/4-16 UNEF	1.06	3/4-16 UNEF
GR2130-09	√	√	√		√		√	3/4-20 UNEF	1.06	3/4-20 UNEF
GR2130-10	√	√	√		√	√	√	7/8-20 UNEF	1.19	7/8-20 UNEF
GR2130-11	√	√	√		√		√	1-20 UNEF	1.31	1-20 UNEF
GR2130-12						√		1-1/16-18 UNEF	1.38	1-1/16-18 UNEF
GR2130-13				√				1-1/8-12 UN	1.44	1-1/8-12 UN
GR2130-14				√				1-1/8-14 N	1.44	1-1/8-14 N
GR2130-15	√		√					1-1/8-18 UNEF	1.44	1-1/8-18 UNEF
GR2130-16	√		√					1-1/8-24 UNS	1.44	1-1/8-24 UNS
GR2130-17		√			√		√	1-3/16-18 UNEF	1.50	1-3/16-18 UNEF
GR2130-18	√		√					1-1/4-18 UNEF	1.56	1-1/4-18 UNEF
GR2130-19				√				1-288-14 UNEF	1.60	1-288-14 UNEF
GR2130-20				√				1-5/16-12 UN	1.63	1-5/16-12 UN
GR2130-21	√		√					1-3/8-18 UNEF	1.69	1-3/8-18 UNEF
GR2130-22		√			√		√	1-7/16-18 UNEF	1.75	1-7/16-18 UNEF
GR2130-23				√				1-5/8-12 UN	1.94	1-5/8-12 UN
GR2130-24	√		√					1-5/8-18 UNEF	1.94	1-5/8-18 UNEF
GR2130-25		√			√		√	1-3/4-18 NS	2.06	1-3/4-18 NS
GR2130-26				√				1-3/16-12 UN	2.13	1-3/16-12 UN
GR2130-27	√		√					1-7/8-16 UN	2.19	1-7/8-16 UN
GR2130-28	√		√					1-29/32-18 UNS	2.22	1-29/32-18 UNS
GR2130-29	√		√		√		√	2-18 NS	2.31	2-18 NS
GR2130-30				√				2.025-11-1/2 N	2.34	2.025-11-1/2 N
GR2130-31				√				2-1/16-12 UN	2.38	2-1/16-12 UN

Figure 4-12. GR2130 Isolator Adapter (Sheet 1 of 2)

GR2130 Continued

TABLE I (Continued)

BASIC PART NO	MATES WITH GR 2000 SERIES							A THREAD CLASS 2B	B DIA ± .02	C THREAD CLASS 2A
	2120	2121	2122	2123	2124	2125	2129			
GR2130-32	√		√					2-1/16-16 UN	2.38	2-1/16-16 UN
GR2130-33	√		√	√				2-1/16-20 UNEF	2.38	2-1/16-20 UNEF
GR2130-34	√		√					2-1/8-16 UN	2.44	2-1/8-16 UN
GR2130-35	√		√					2-1/8-18 UNS	2.44	2-1/8-18 UNS
GR2130-36				√				2-1/4-11-1/2 N	2.56	2-1/4-11-1/2 N
GR2130-37		√			√			2-1/4-16 UN	2.56	2-1/4-16 UN
GR2130-38				√				2-5/16-12 UN	2.63	2-5/16-12 UN
GR2130-39	√		√					2-5/16-16 UN	2.63	2-5/16-16 UN
GR2130-40	√		√				√	2-3/8-16 UN	2.69	2-3/8-16 UN
GR2130-41		√			√		√	2-1/2-16 UN	2.81	2-1/2-16 UN
GR2130-42	√		√				√	2-5/8-16 UN	2.94	2-5/8-16 UN
GR2130-43				√				2-11/16-12 UN	3.00	2-11/16-12 UN
GR2130-44	√		√					2-13/16-18 UNS	3.13	2-13/16-18 UNS
GR2130-45	√		√					2-7/8-16 UN	3.19	2-7/8-16 UN
GR2130-46				√				3-12 UN	3.31	3-12 UN
GR2130-47		√			√			3-16 UN	3.31	3-16 UN
GR2130-48				√			√	3-1/8-1/2 UN	3.44	3-1/8-1/2 UN
GR2130-49								3-3/8-16 UN	3.69	3-3/8-16 UN
GR2130-50								3-7/8-16 UN	4.19	3-7/8-16 UN
GR2130-51				√				3/4-14 NPSM	1.35	3/4-14 NPSM
GR2130-52				√				1-11-1/2 NPSM	1.61	1-11-1/2 NPSM
GR2130-53				√				1-1/4-11-1/2 NPSM	1.95	1-1/4-11-1/2 NPSM
GR2130-54				√				2-1/2-8 NPSM	3.15	2-1/2-8 NPSM
GR2130-55				√				3-8 NPSM	3.78	3-8 NPSM

TABLE II

MATERIAL CODE	MATERIAL	SPECIFICATION
N	NYLON, RIGID: RODS, TUBES, ETC	L-P-410
	NYLON, MOLDING PLASTIC	MIL-M-20693, TYPE II
STN	SUPER TOUGH NYLON ZYTEL, ST801 (OR EQUIV)	DUPONT SPEC. SHEETS OR EQUIVALENT SOURCE

PART NUMBER DEVELOPMENT

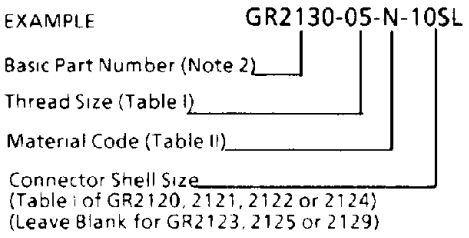

Notes:

1. THE GR2130 ISOLATOR ADAPTER IS MADE OF A NON-CONDUCTIVE MATERIAL TO ELECTRICALLY INSULATE THE GR2000 SERIES FITTINGS FROM THE ASSOCIATED CONNECTORS, BACKSHELLS, STUFFING-TUBES, ETC.
2. BASIC PART NO. WITHOUT O-RINGS IS GR2125
   BASIC PART NO. WITH O-RINGS IS GRO2125
3. ADAPTERS NUMBERED GR2130-51 THROUGH GR2130-55 HAVE NPSM THREADS (STRAIGHT PIPE THREADS FOR MECHANICAL JOINTS).
4. PARTS IDENTIFIED PER MIL-STD-130
5. DIMENSIONS IN INCHES.

Figure 4-12. GR2130 Isolator Adapter (Sheet 2 of 2)

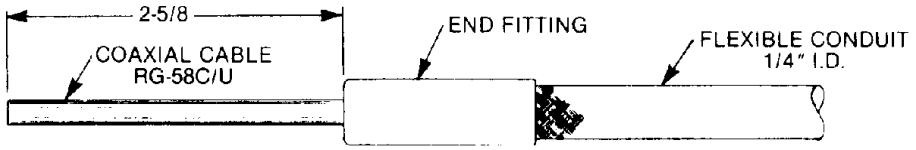

VIEW A

1. TIN THE END OF FLEXIBLE CONDUIT LIGHTLY AND CUT OFF RAGGED PORTION WITH A HACKSAW.
2. PLACE END FITTING OVER FLEXIBLE CONDUIT AND SILVER SOLDER IN PLACE. HOLD END FITTING AND CONDUIT VERTICALLY WHEN SOLDERING TO PREVENT EXCESS SOLDER FROM RUNNING BACK ONTO THE CONDUIT AND INTRODUCING UNWANTED STIFFNESS
   BASIC PART NO. WITH O-RINGS IS GRO2125
3. ADAPTERS NUMBERED GR2130-51 THROUGH GR2130-55 HAVE NPSM THREADS (STRAIGHT PIPE THREADS FOR MECHANICAL JOINTS).

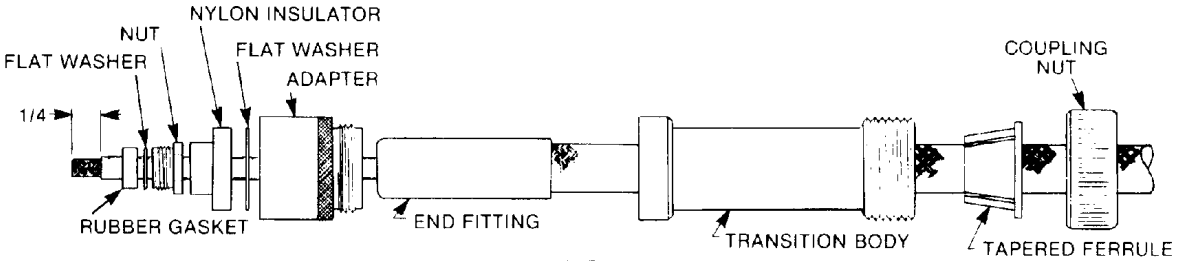

VIEW B

4. SLIDE COUPLING NUT, TAPERED FERRULE, AND TRANSITION BODY OVER CABLE AND FLEXIBLE CONDUIT AS SHOWN IN VIEW B.
5. PLACE ADAPTER, FLAT WASHER, NYLON INSULATOR, NUT, FLAT WASHER, AND GASKET OVER CABLE.
6. CUT CABLE JACKET BACK 1/4 INCH EXPOSING BRAID.

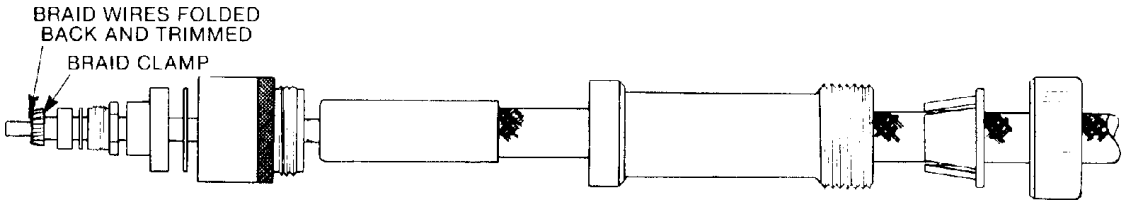

VIEW C

7. PLACE BRAID CLAMP OVER BRAID AND PUSH BACK AGAINST CABLE JACKET.
8. COMB OUT BRAID AND FOLD BRAID WIRES EVENLY AROUND CIRCUMFERENCE OF BRAID CLAMP TO ENSURE GOOD ELECTRICAL CONTACT.
9. TRIM BRAID TO PROPER LENGTH AS SHOWN IN VIEW C.

Figure 4-13. Assembly Instructions - Flexible Conduit to Triaxial Connector Using a GR2125 Transition Fitting Room (Sheet 1 of 2)

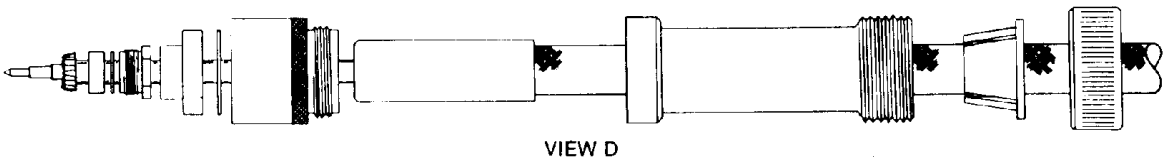

VIEW D

10. CUT DIELECTRIC BACK 1/8 INCH EXPOSING COPPER CONDUCTOR.
11. SOLDER MALE CONTACT TO CENTER CONDUCTOR. REMOVE ANY EXCESS SOLDER FROM THE CONTACT WITH A FILE OR KNIFE.

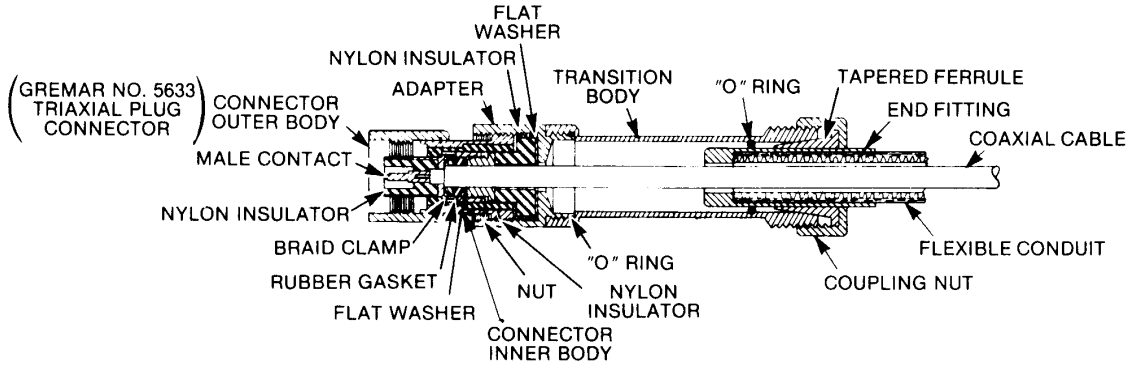

VIEW E

12. PLACE TRIAXIAL CONNECTOR INNER BODY OVER MALE CONTACT AND BRAID CLAMP. SLIDE RUBBER GASKET AND FLAT WASHER INTO BODY AND TIGHTEN NUT IN PLACE. SCREW ADAPTER ONTO TRANSITION BODY. SEE VIEW E..
13. HOLD TRANSITION BODY IN ONE HAND AND PULL BACK ON FLEXIBLE CONDUIT UNTIL BACK END OF END FITTING EXTENDS APPROXIMATELY 1/2 INCH BEYOND THE MALE THREADED END OF THE TRANSITION BODY. SLIDE THE TAPERED FERRULE INTO PLACE AND TIGHTEN COUPLING NUT ONTO BODY.
14. PLACE NYLON INSULATOR OVER INNER BODY, THEN SLIDE OUTER BODY INTO PLACE AND TIGHTEN AS REQUIRED.

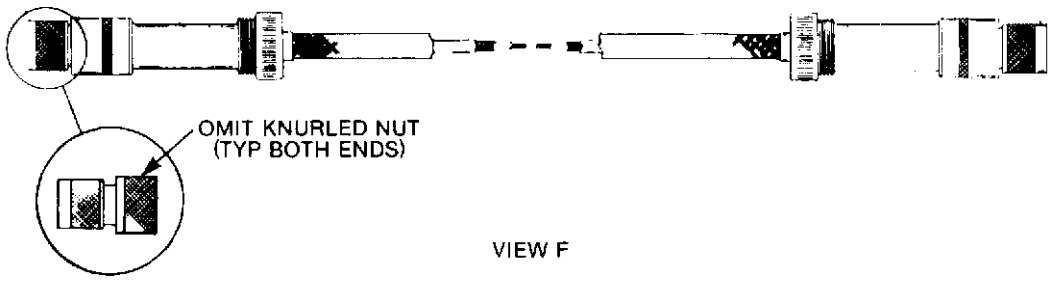

VIEW F

15. ASSEMBLE FITTINGS ON OTHER END OF FLEXIBLE CONDUIT BEING SURE TO PREDETERMINE THE CABLE LENGTH AND THE POSITION OF THE END FITTING WITHIN THE TRANSITION BODY. SEE VIEW F.

Figure 4-13. Assembly Instructions - Flexible Conduit to Triaxial Connector Using a GR2125 Transition Fitting Room (Sheet 2 of 2)

SECTION 5

RP2000 SERIES FITTINGS FOR FLEXIBLE CONDUIT (REUSABLE TYPE)

Section 5

RP2000-SERIES FITTINGS FOR FLEXIBLE CONDUIT (REUSABLE TYPE)

TABLE OF CONTENTS

Paragraph		Page
	LIST OF ILLUSTRATIONS	5-ii
	LIST OF TABLES	5-ii
5.1	BACKGROUND	5-1
5.2	SCOPE	5-1
5.3	APPLICABLE DOCUMENTS	5-1
5.3.1	Issues of Documents	5-1
5.3.2	Other Publications	5-2
5.4	CONSTRUCTION	5-2
5.4.1	Function	5-2
5.4.2	Basic Construction	5-3
5.4.3	Conduit-Gripping Mechanism	5-4
5.4.4	Overlap Length	5-4
5.4.5	Minimum ID	5-4
5.4.6	Knurl Length	5-4
5.4.7	Standard Thread Sizes	5-4
5.5	MATERIALS	5-5
5.5.1	Material for Most Fittings	5-5
5.5.2	Optional Material for RP2330	5-5
5.5.3	Optional Material for RP2350	5-5
5.5.4	Material for RP2440	5-5
5.6	FINISH	5-5
5.6.1	Finish for Steel Fittings	5-5
5.6.2	Finish for Aluminum Fitting	5-5
5.7	WORKMANSHIP	5-5
5.7.1	Welding or Brazing	5-6
5.7.2	Cable Protection	5-6
5.8	MARKING	5-6
5.9	PERFORMANCE	5-6
5.9.1	Welding Restriction	5-6
5.9.2	Tensile and Compressive Load Tests	5-6
5.10	QUALIFICATION	5-6
5.10.1	Qualification	5-6
5.10.2	Application for Qualification	5-7
5.10.3	Deviations	5-7
5.10.4	Sources	5-7
5.11	PREPARATION FOR DELIVERY	5-7
5.11.1	Identification Label	5-7
5.11.2	Packaging	5-7
5.12	DATA SHEETS FOR FITTINGS AND ADAPTERS	5-7

TABLE OF CONTENTS (Continued)

LIST OF ILLUSTRATIONS

Figure		Page
5-1	RP2100 Conduit End Fitting, Straight	5-8
5-2	RP2110 Conduit End Fitting, 90°	5-9
5-3	RP2120 Conduit End Fitting, 45°	5-10
5-4	RP2130 End Fitting, Conduit-to-Panel	5-11
5-5	RP2140 End Fitting, Conduit-to-Pipe Thread (Tapered)	5-12
5-6	RP2141 End Fitting, Conduit-to-Pipe Thread (Straight)	5-13
5-7	RP2200 Coupling, Conduit-to-Conduit	5-14
5-8	RP2210 Coupling, Conduit-to-Pipe	5-15
5-9	RP2311 Adapter for MIL-C-5015 Connector	5-16
5-10	RP2321 Adapter for Triaxial Connector	5-18
5-11	RP2330 Adapter for Coaxial Connector	5-19
5-12	RP2340 Adapter for MIL-C-26482 Connector	5-22
5-13	RP2350 Adapter for MS3155-Type Connectors	5-24
5-14	RP2360 Adapter for MIL-C-28840(EC) Backshell	5-26
5-15	RP2400 Adapter for MIL-S-24235/1 Stuffing Tube	5-28
5-16	RP2411 Adapter for Miscellaneous Threaded Fittings	5-29
5-17	RP2420 Adapter for MIL-C-24231 Hull Fitting	5-30
5-18	RP2430 Adapter for Pipe Thread (Tapered)	5-31
5-19	RP2431 Adapter for Pipe Thread (Straight)	5-32
5-20	RP2440 Adapter, Nonmetallic	5-33
5-21	RP2500 Adapter for Panel Termination	5-34
5-22	RP2610 Adapter, 90°	5-35
5-23	RP2620 Adapter, 45°	5-36

LIST OF TABLES

Table		Page
5-1	RP2000-Series Fittings	5-3
5-2	Standard Thread Sizes for End-Fittings and Adapters	5-4

Section 5

RP2000-SERIES FITTINGS FOR FLEXIBLE CONDUIT (REUSABLE TYPE)

5.1 BACKGROUND

The original specification for RP2000-Series fittings appeared in appendix 3 of NAVSHIPS 0967-283-5010, dated 5 October 1972. These original fittings were designed to fit the flexible shielding conduit specified in appendix 1 of the same document, which did not specify a standard outside diameter dimension for each size of conduit. As a result, the outside diameter varied with each manufacturer, and the fittings made by a particular manufacturer were designed to fit their conduit only.

5.2 SCOPE

This specification describes RP2000-Series fittings to be used on the flexible metal shielding conduit specified in appendix D, in which the dimension of the outside diameter for each nominal size of conduit is standardized.

The fittings described in this section are attached to the conduit by gripping the conduit braid directly by means of friction and do not provide a watertight assembly. By comparison, the GR2000-Series (described in section 4) requires that a component of the fitting be brazed directly to the conduit braid. The assembly is made watertight by means of O-ring seals. For most installations the RP2000-Series fittings are preferred.

5.3 APPLICABLE DOCUMENTS

5.3.1 Issues of Documents

The following documents, of the issue in effect on date of invitation for bids or request for proposal, form a part of this specification to the extent specified herein.

SPECIFICATIONS

Federal

L-P-410	Plastic, Polyamide (nylon), Rigid: Rods, Tubes, Flats, Molded and Cast Parts
QQ-A-225	Aluminum and Aluminum Alloy Bar, Rod, Wire or Special Shapes; Rolled, Drawn or Cold Finished; General Specification for

STANDARDS

Federal

FED-STD-66	Steel, Chemical Composition and Hardenability

Military

MIL-STD-130	Identification Marking of U.S. Military Property
MS3155 (NAVY)	Connector, Electric, Rear Accessory Design Standard

(Copies of specifications, standards, drawings, and publications required by contractors in connection with specific procurement functions should be obtained from the procuring activity or as directed by the contracting officer.)

5.3.2 Other Publications

The following documents form a part of this specification to the extent specified herein. Unless otherwise indicated, the issue in effect on date of invitation for bids or request for proposal shall apply.

American Society for Testing and Materials (ASTM)

ANSI/ASTM-D4066	Standard Specification for Nylon Injection and Extrusion Materials
ASTM-STD-B85	Aluminum Alloy Die Castings
SAE AMS 2404C	Electroless Nickel Plating
National Bureau of Standards Handbook H28	Screw-Thread Standards for Federal Services (Parts I & II)

5.4 CONSTRUCTION

5.4.1 Function

The RP2000-Series reusable fittings provide a method of joining connectors, applicable hull fittings, and similar devices to flexible shielding conduit. There are three basic types in this series:

a. An end fitting, which is attached to a conduit and provides a standard thread size for attaching adapters;

b. A coupling, which typically joins two lengths of conduit; and

c. An adapter, which provides thread compatibility between an end-fitting and various devices such as connectors and hull fittings.

The term "reusable" means that an end fitting or coupling can be readily attached to or removed from conduit simply by tightening or loosening a gripping mechanism.

Table 5-1 lists the RP2000-Series fittings. These fittings are illustrated in the data sheets (see paragraph 5.12).

Table 5-1. RP2000-Series Fittings

Type	Fig. No.	Basic Part No.	Description
End Fittings	5-1	RP2100	Conduit End Fitting, Straight
	5-2	RP2110	Conduit End Fitting, 90°
	5-3	RP2120	Conduit End Fitting, 45°
	5-4	RP2130	End Fitting, Conduit-to-Panel
	5-5	RP2140	End Fitting, Conduit-to-Pipe Thd (Tapered)
	5-6	RP2141	End Fitting, Conduit-to-Pipe Thd (Straight)
Couplings	5-7	RP2200	Coupling, Conduit-to-Conduit
	5-8	RP2210	Coupling, Conduit-to-Pipe
Adapters (Connectors)	5-9	RP2311	Adapter for MIL-C-5015 Connector
	5-10	RP2321	Adapter for Triaxial Connector
	5-11	RP2330	Adapter for Coaxial Connector
	5-12	RP2340	Adapter for MIL-C-26482 Connector
	5-13	RP2350	Adapter for MS3155 Type Connectors
	5-14	RP2360	Adapter for MIL-C-28840(EC) Backshell
Adapters (Misc)	5-15	RP2400	Adapter for MIL-S-24235/1 Stuffing Tube
	5-16	RP2411	Adapter for Misc Threaded Fittings
	5-17	RP2420	Adapter for MIL-C-24231 Hull Fitting
	5-18	RP2430	Adapter for Pipe Thread (Tapered)
	5-19	RP2431	Adapter for Pipe Thread (Straight)
	5-20	RP2440	Adapter, Nonmetallic
Adapter (End)	5-21	RP2500	Adapter for Panel Termination
Adapters (Angle)	5-22	RP2610	Adapter, 90°
	5-23	RP2620	Adapter, 45°

5.4.2 Basic Construction

The illustrations in the data sheets, figures 5-1 through 5-23, show the basic construction and the essential characteristics of the RP2000-Series fittings. The illustrations are those of typical fittings and are intended to show function only. Other constructional details are left to the option of the manufacturer except as noted elsewhere in this specification. Welded fabrication of the fittings is allowed. Dimensions and thread sizes shown are those which must exist after plating is completed.

5.4.3 Conduit-Gripping Mechanism

The illustrations of end fittings and couplings, figures 5-1 through 5-8, show a slotted ferrule as the conduit-gripping mechanism, but any other simple method that meets the performance requirements is acceptable.

5.4.4 Overlap Length

The overlap length "L" in the illustrations of end fittings and couplings indicates the minimum length of conduit required by the conduit-gripping mechanism to function properly.

5.4.5 Minimum ID

The minimum inside diameter of end-fittings and of conduit couplings shall not be less than the minimum inside diameter of the associated conduit.

5.4.6 Knurl Length

The total length of a knurl may consist of either one wide band (as illustrated in the figures) or two or more narrow bands of knurls located close to each other.

5.4.7 Standard Thread Sizes

Table 5-2 lists a series of standard thread sizes which have been selected for mating between end-fittings and adapters. A single thread size is associated with each size of end-fitting, and each size of end-fitting is associated with only one size of conduit. Thus, any size conduit can be terminated at a variety of connectors, hull fittings, etc., by means of its associated end-fitting and the proper adapter. The thread classes shall be Class 2A and 2B for the male and female threads, respectively. They shall be constructed according to the standards set forth in Handbook H28 (Part 1).

Table 5-2. Standard Thread Sizes for End-Fittings and Adapters

STANDARD SIZE CONDUIT			END-FITTING	ADAPTER
Conduit Part Number	Conduit Size (Nominal ID) (inches)	Conduit OD (Over Braid)	B Thread (Class 2B)	C Thread (Class 2A)
EM02	1/4	0.42 ± 0.01	0.4375 -28 UNEF	0.4375 -28 UNEF
EM03	3/8	0.54 ± 0.01	0.5625 -24 UNEF	0.5625 -24 UNEF
EM04	1/2	0.69 ± 0.01	0.6875 -24 UNEF	0.6875 -24 UNEF
EM05	5/8	0.82 ± 0.01	0.8125 -20 UNEF	0.8125 -20 UNEF
EM06	3/4	0.94 ± 0.01	0.9375 -20 UNEF	0.9375 -20 UNEF
EM08	1	1.25 ± 0.01	1.250 -18 UNEF	1.250 -18 UNEF
EM10	1-1/4	1.50 ± 0.01	1.5625 -18 UNEF	1.5625 -18 UNEF
EM12	1-1/2	1.75 ± 0.01	1.875 -16 UN	1.875 -16 UNEF
EM16	2	2.28 ± 0.015	2.375 -16 UN	2.375 -16 UNEF
EM20	2-1/2	2.78 ± 0.015	2.875 -16 UN	2.875 -16 UN
EM24	3	3.28 ± 0.015	3.375 -16 UN	3.375 -16 UN

5.5 MATERIALS

5.5.1 Material for Most Fittings

Unless otherwise noted, the RP2000-Series fittings shall be made of mild steel, AISI type B113, or any AISI-type low-carbon, hot, or cold-rolled steels, in accordance with FED-STD-66, having chemical compositions within the following ranges:

Carbon	(C)	0.08% to 0.25% max
Manganese	(Mn)	0.25% to 1.15% max
Phosphorus	(P)	0.04% to 0.12% max
Sulphur	(S)	0.05% to 0.35% max
Lead	(Pb)	0.15% to 0.35% max

5.5.2 Optional Material for RP2330

The RP2330 adapter may be fabricated from polyamide (nylon) in accordance with L-P-410 or ANSI/ASTM-D4066 whenever installations require that the RP2330 insulate the connector from conduit.

5.5.3 Optional Material for RP2350

The RP2350 adapter may be fabricated from aluminum alloy in accordance with QQ-A-225 or ASTM-STD-B85 provided that minimum spacing requirements for aluminum backshells as delineated in paragraph 7.7 are met.

5.5.4 Material for RP2440

The RP2440 adapter shall be fabricated from polyamide (nylon) rods or tubes in accordance with L-P-410 or molded from nylon molding plastic in accordance with ANSI/ASTM-D4066. An optional material is the "super tough" nylon identified by the Dupont trade name "Zytel" ST801 (or equivalent). Super tough nylon comes in stock shapes for machining, or it can be molded.

5.6 FINISH

5.6.1 Finish for Steel Fittings

The finish on the steel fittings shall be electroless nickel in accordance with SAE AMS 2404C Electroless Nickel Plating.

5.6.2 Finish for Aluminum Fitting

The finish on the aluminum fitting shall be electroless nickel in accordance with SAE AMS 2404C Electroless Nickel Plating.

5.7 WORKMANSHIP

Fittings shall be fabricated so that they are uniform in quality and free from defects that could make the fitting unsatisfactory for the intended purpose.

5.7.1 Welding or Brazing

Fittings fabricated by welding or brazing shall have joints free from defects such as cracks, undercuts, and gaps. There shall be no burn-through. Fillets shall be uniform and smooth.

5.7.2 Cable Protection

The fittings shall have smooth inner surfaces free from sharp edges that could abrade the insulation or braid of a cable. Use chamfers or radii where applicable. Break all sharp edges and corners.

5.8 MARKING

Each RP2000-Series fitting shall be marked in accordance with MIL-STD-130 with the name of the manufacturer and with its complete part number as specified in this section. Additional markings may be included at the option of the manufacturer.

5.9 PERFORMANCE

5.9.1 Welding Restriction

Installation of any RP2000-Series fitting shall not require welding, brazing, or similar operations.

5.9.2 Tensile and Compressive Load Tests

All end-fittings and couplings shall withstand, without slippage, a tensile load of 50 pounds applied between fitting and conduit for 1 minute. Also, such fittings shall withstand, without slippage, a compressive load of 50 pounds applied between fitting and conduit for 1 minute.

5.10 QUALIFICATION

5.10.1 Qualification

Manufacturers' designs for end-fittings and couplings must be approved by the Navy. Qualification tests are not required for adapters, but they must be manufactured in accordance with this specification. Manufacturers who are interested in having their designs approved should follow the procedure listed below. Samples sent for testing should be addressed to the Naval Undersea Warfare Center, Code 3431, Newport, RI 02841-1708. Approval of the RP2100 and RP2200 fittings will be based on conformity of the fitting to the characteristics outlined in this specification and on any other factors which may affect intended performance. The Navy reserves the right to require that sample fittings be made available for testing in all sizes the manufacturer wishes to have approved. No indebtedness between the U.S. Government and any manufacturer will be incurred in connection with these qualification tests. Test samples and drawings shall be shipped prepaid by the manufacturer and will not be returned.

5.10.2 Application for Qualification

Manufacturers shall submit to NUWC, EMC Branch, Code 3431, Newport, RI, a sample 3/4-inch size RP2100 end-fitting installed on a 1-foot length of conduit (identified by manufacturer's name and part number). In addition, drawings showing construction details of all sizes of the RP2100 end-fitting shall be submitted. The drawings shall be numbered and dated for reference purposes.

5.10.3 Deviations

Deviations from this specification such as change in thread size, material or mechanical design will be considered if the performance requirements can be met. Most changes will require a new part number for proper identification. Requests for approval of a modification, and assignment of a new part number shall be addressed to NUWC, EMC Branch, Code 3431, Newport, RI, telephone (800)-669-6892 X35540. New part numbers and data will be made available upon request, and will be included in the next change to this handbook.

5.10.4 Sources

The RP2100- and RP2200-Series fittings must be obtained only from the qualified sources listed in the Qualified Products List, appendix C. Since the RP2300- through RP2600-Series adapters are simple threaded fittings, they may be obtained from any source which manufactures them in accordance with this specification.

5.11 PREPARATION FOR DELIVERY

5.11.1 Identification Label

A printed label or tag, in addition to marking required by paragraph 5.8, shall be furnished with each fitting. The label shall provide the part number, the manufacturer's name, and any other information, such as a sketch or instruction, which the manufacturer deems pertinent for proper installation.

5.11.2 Packaging

Each fitting supplied under this specification shall be individually packaged together with an identification label (see paragraph 5.11.1) in a transparent plastic bag. The bag shall have an interlocking seal ("ZIP-LOC" type) or shall be closed by heat sealing. Part number identification on the label shall be easily visible through the sealed bag.

5.12 DATA SHEETS FOR FITTINGS AND ADAPTERS

The following data sheets, figures 5-1 through 5-23, form a part of this specification. They include assembly drawings, tables of appropriate data, and part number information.

Information regarding installation methods for these fittings may be obtained from NAVSHIPS drawing 80064-302-4788653, "Installation Methods for High-Permeability Flexible Conduit Hardware," (revision A is the latest revision as of the date of this handbook). Note that this drawing is referenced for information only and, where discrepancies exist, this handbook takes precedence. Note, for example, that the "Typical Grounding Method" shown as "Method 10-E" in sheet 010 is superseded by the method shown in MIL-STD-1310D.

RP2100 Conduit End Fitting, Straight

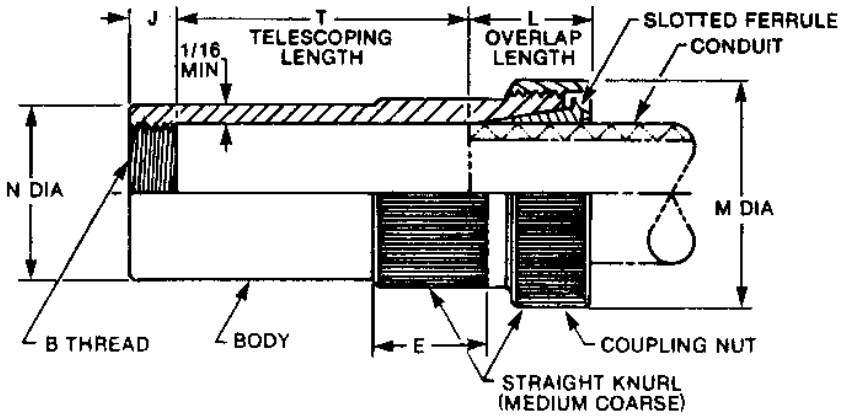

STANDARD CONDUIT		END FITTING						
CONDUIT PART NUMBER	CONDUIT SIZE (Nom ID)	B THREAD (Class 2B)	J THREAD LENGTH +.06, −0	T TELESCOPING LENGTH ±.12	L OVERLAP LENGTH ±.06	E KNURL LENGTH ±.06	M OD (Max.)	N DIA (Max.)
EM02	1/4	.4375 - 28 UNEF	.21	1.50	.75	.50	.93	.70
EM03	3/8	.5625 - 24 UNEF	.25	1.50	.75	.50	1.12	.82
EM04	1/2	.6875 - 24 UNEF	.25	1.75	.75	.62	1.25	.97
EM05	5/8	.8125 - 20 UNEF	.31	1.75	.75	.62	1.43	1.12
EM06	3/4	.9375 - 20 UNEF	.31	2.00	.75	.75	1.62	1.22
EM08	1	1.250 - 18 UNEF	.37	2.00	1.00	.75	1.81	1.53
EM10	1-1/4	1.5625 - 18 UNEF	.37	2.50	1.00	.87	2.18	1.81
EM12	1-1/2	1.875 - 16 UN	.43	2.50	1.00	.87	2.56	2.12
EM16	2	2.375 - 16 UN	.43	3.00	1.00	1.00	3.06	2.62
EM20	2-1/2	2.875 - 16 UN	.43	3.00	1.00	1.00	3.86	3.12
EM24	3	3.375 - 16 UN	.43	3.00	1.00	1.00	4.38	3.62

PART NUMBER DEVELOPMENT

Example: RP2100 - EM08 - T

Basic Part Number

Conduit Part Number

Length Code

T - Telescoping Length

S - Short Length (where telescoping feature not required)

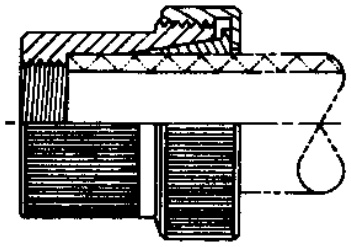

SHORT VERSION

NOTES:

1. THE FUNCTION OF THE RP2100 END FITTING IS TO TERMINATE FLEXIBLE SHIELDING CONDUIT AND PROVIDE A STANDARD THREAD FOR ATTACHING ALL RP2000 SERIES ADAPTERS.
2. SEE TEXT FOR MATERIAL, FINISH, MARKING, ETC.
3. DIMENSIONS ARE IN INCHES.

Figure 5-1. RP2100 Conduit End Fitting, Straight

RP2100 Conduit End Fitting, 90°

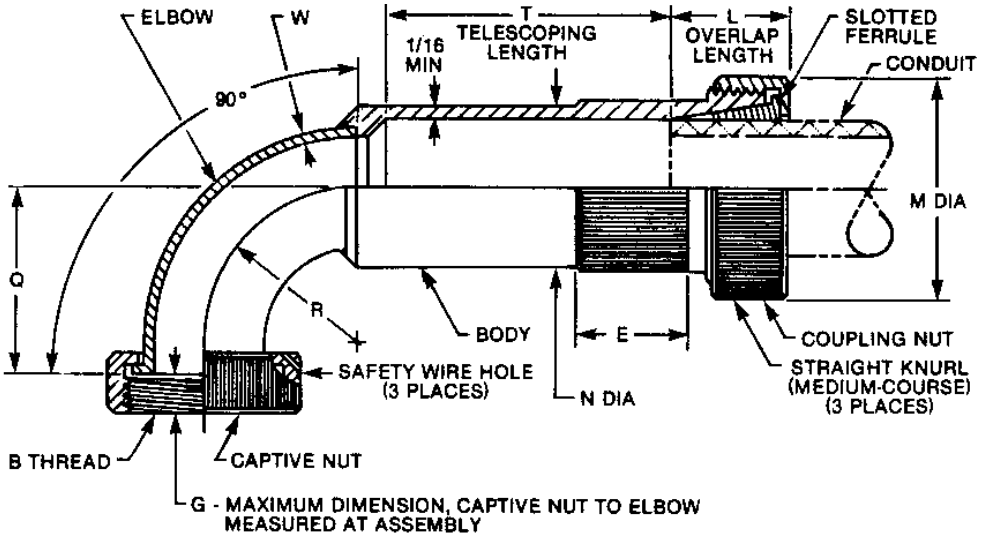

STANDARD CONDUIT		END FITTING									
CONDUIT PART NUMBER	CONDUIT SIZE (Nom. ID)	B THREAD (Class 2B)	G +.01 −.02	Q ±.06	R BEND RADIUS ±.06	W WALL THICK. (Min.)	T TLSCPG LENGTH ±.12	L OVERLAP LENGTH ±.06	E KNURL LENGTH ±.06	M OD (Max.)	N DIA (Max.)
EM02	1/4	.4375 - 28 UNEF	.14	.81	.43	.028	1.50	.75	.50	.93	.70
EM03	3/8	.5625 - 24 UNEF	.17	.93	.56	.028	1.50	.75	.50	1.12	.82
EM04	1/2	.6875 - 24 UNEF	.17	1.12	.75	.028	1.75	.75	.62	1.25	.97
EM05	5/8	.8125 - 20 UNEF	.23	1.25	.87	.028	1.75	.75	.62	1.43	1.12
EM06	3/4	.9375 - 20 UNEF	.23	1.47	1.06	.028	2.00	.75	.75	1.62	1.22
EM08	1	1.250 - 18 UNEF	.29	1.81	1.37	.028	2.00	1.00	.75	1.81	1.53
EM10	1-1/4	1.5625 - 18 UNEF	.29	2.12	1.68	.028	2.50	1.00	.87	2.18	1.81
EM12	1-1/2	1.875 - 16 UN	.35	2.50	2.06	.058	2.50	1.00	.87	2.56	2.12
EM16	2	2.375 - 16 UN	.35	3.12	2.68	.058	3.00	1.00	1.00	3.06	2.62
EM20	2-1/2	2.875 - 16 UN	.35	3.75	3.31	.058	3.00	1.00	1.00	3.68	3.12
EM24	3	3.375 - 16 UN	.35	5.00	4.50	.058	3.00	1.00	1.00	4.38	3.62

PART NUMBER DEVELOPMENT

Example: RP2110 - EM08 - T

- Basic Part Number
- Conduit Part Number
- Length Code
  - T - Telescoping Length
  - S - Short Length (where telescoping feature not required)

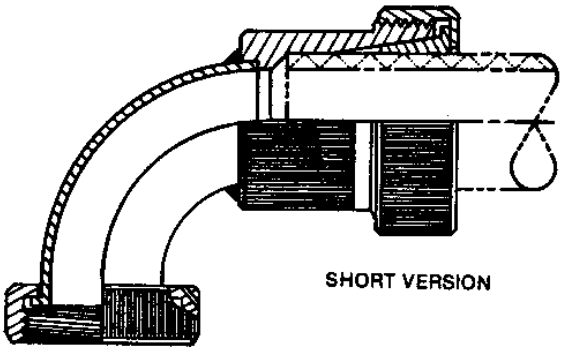

NOTES:

1. THE FUNCTION OF THE RP2110 90° END FITTING IS TO TERMINATE FLEXIBLE SHIELDING CONDUIT AND PROVIDE A STANDARD THREAD FOR ATTACHING ALL RP2000 SERIES ADAPTERS.
2. SEE TEXT FOR MATERIAL, FINISH, MARKING, ETC.
3. DIMENSIONS ARE IN INCHES.

Figure 5-2. RP2110 Conduit End Fitting, 90°

RP2120 Conduit End Fitting, 45°

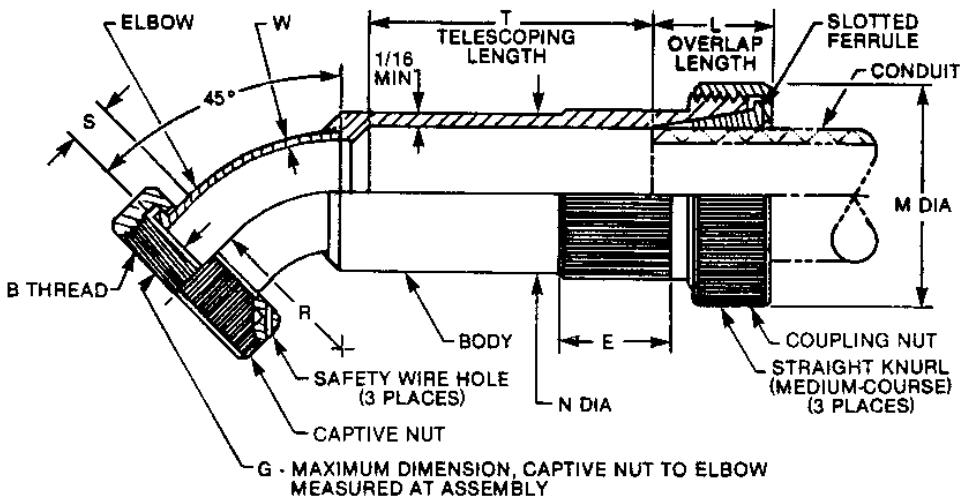

STANDARD CONDUIT		END FITTING									
CONDUIT PART NUMBER	CONDUIT SIZE (Nom. ID)	B THREAD (Class 2B)	G +.01 −.02	S ±.06	R BEND RADIUS ±.06	W WALL THICK. (Min.)	T TLSCPG LENGTH ±.12	L OVERLAP LENGTH ±.06	E KNURL LENGTH ±.06	M OD (Max.)	N DIA (Max.)
EM02	1/4	.4375 - 28 UNEF	.14	.37	.43	.028	1.50	.75	.50	.93	.70
EM03	3/8	.5625 - 24 UNEF	.17	.37	.56	.028	1.50	.75	.50	1.12	.82
EM04	1/2	.6875 - 24 UNEF	.17	.37	.75	.028	1.75	.75	.62	1.25	.97
EM05	5/8	.8125 - 20 UNEF	.23	.37	.87	.028	1.75	.75	.62	1.43	1.12
EM06	3/4	.9375 - 20 UNEF	.23	.37	1.06	.028	2.00	.75	.75	1.62	1.22
EM08	1	1.250 - 18 UNEF	.29	.43	1.37	.028	2.00	1.00	.75	1.81	1.53
EM10	1-1/4	1.5625 - 18 UNEF	.29	.43	1.68	.028	2.50	1.00	.87	2.18	1.81
EM12	1-1/2	1.875 - 16 UN	.35	.43	2.06	.058	2.50	1.00	.87	2.56	2.12
EM16	2	2.375 - 16 UN	.35	.43	2.68	.058	3.00	1.00	1.00	3.06	2.62
EM20	2-1/2	2.875 - 16 UN	.35	.43	3.31	.058	3.00	1.00	1.00	3.68	3.12
EM24	3	3.375 - 16 UN	.35	.50	4.50	.058	3.00	1.00	1.00	4.38	3.62

PART NUMBER DEVELOPMENT

Example: RP2120 - EM08 - T

- Basic Part Number
- Conduit Part Number
- Length Code
  - T - Telescoping Length
  - S - Short Length (where telescoping feature not required)

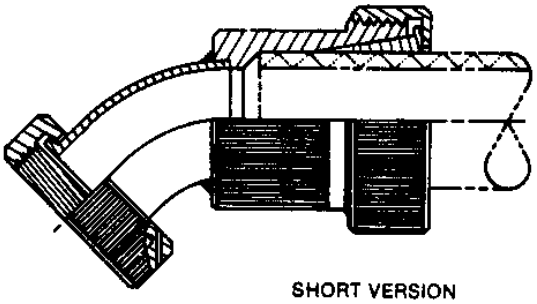

SHORT VERSION

NOTES:

1. THE FUNCTION OF THE RP2120 45° END FITTING IS TO TERMINATE FLEXIBLE SHIELDING CONDUIT AND PROVIDE A STANDARD THREAD FOR ATTACHING ALL RP2000 SERIES ADAPTERS.
2. SEE TEXT FOR MATERIAL, FINISH, MARKING, ETC.
3. DIMENSIONS ARE IN INCHES.

Figure 5-3. RP2120 Conduit End Fitting, 45°

RP2130 End Fitting, Conduit-to-Panel

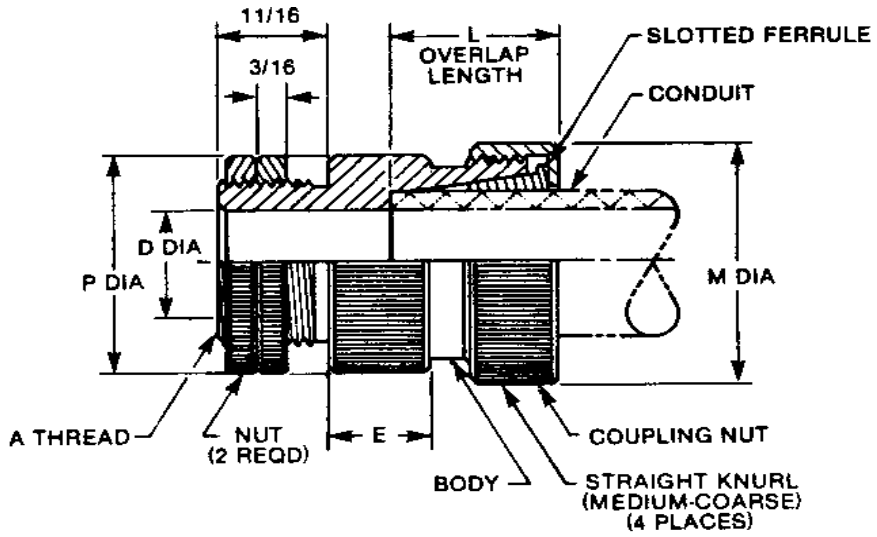

STANDARD CONDUIT		END FITTING					
CONDUIT PART NUMBER	CONDUIT SIZE (Nom. ID)	A THREAD (Class 2A)	D DIA (Min.)	P DIA (Min.)	L OVERLAP LENGTH ± .06	E KNURL LENGTH ± .06	M OD (Max.)
EM02	1/4	.625 - 24 UNEF	.25	.87	.75	.50	.93
EM03	3/8	.750 - 20 UNEF	.37	1.00	.75	.50	1.12
EM04	1/2	.875 - 20 UNEF	.50	1.12	.75	.56	1.25
EM05	5/8	1.000 - 20 UNEF	.62	1.25	.75	.56	1.43
EM06	3/4	1.1875 - 18 UNEF	.75	1.43	.75	.62	1.62
EM08	1	1.4375 - 18 UNEF	1.00	1.68	1.00	.62	1.81
EM10	1-1/4	1.750 - 16 UN	1.25	2.00	1.00	.68	2.18
EM12	1-1/2	2.000 - 16 UN	1.50	2.25	1.00	.68	2.56
EM16	2	2.500 - 16 UN	2.00	3.00	1.00	.75	3.06
EM20	2-1/2	3.000 - 16 UN	2.50	3.50	1.00	.75	3.50
EM24	3	3.500 - 16 UN	3.00	4.00	1.00	.75	4.38

PART NUMBER DEVELOPMENT

Example: RP2130 - EM06

Basic Part Number

Conduit Part Number

NOTES:

1. THE FUNCTION OF THE RP2130 END FITTING IS TO TERMINATE FLEXIBLE SHIELDING CONDUIT DIRECTLY TO A PANEL. TWO NUTS ARE TO BE SUPPLIED WITH THIS FITTING. ONE NUT SECURS THE FITTING TO THE PANEL, AND A SECOND NUT ACTS AS A LOCK NUT TO THE FIRST.
2. SEE TEXT FOR MATERIAL, FINISH, MARKING, ETC.
3. DIMENSIONS ARE IN INCHES.

Figure 5-4. RP2130 Conduit End Fitting, Conduit-to-Panel

RP2140 End Fitting, Conduit-to-Pipe Thread (Tapered)

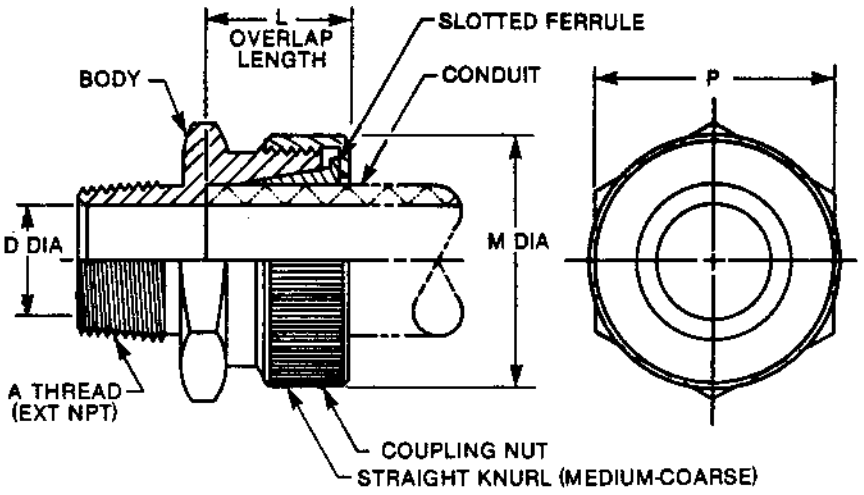

STANDARD CONDUIT		END FITTING				
CONDUIT PART NUMBER	CONDUIT SIZE (Nom. ID)	A PIPE THD (Class 2A)	D DIA (Min.)	L OVERLAP LENGTH ± .06	M MAX OD COUPLING NUT	P MIN DIM WRENCH FLATS
EM02	1/4	1/4 - 18 NPT	.25	.75	.93	.75
EM03	3/8	3/8 - 18 NPT	.37	.75	1.12	.87
EM04	1/2	1/2 - 14 NPT	.50	.75	1.25	.96
EM05	5/8	3/4 - 14 NPT	.62	.75	1.43	1.37
EM06	3/4	3/4 - 14 NPT	.75	.75	1.62	1.18
EM08	1	1 - 11-1/2 NPT	1.00	1.00	1.81	1.50
EM10	1-1/4	1-1/4 - 11-1/2 NPT	1.25	1.00	2.18	1.81
EM12	1-1/2	1-1/2 - 11-1/2 NPT	1.50	1.00	2.56	2.12
EM16	2	2 - 11-1/2 NPT	2.00	1.00	3.06	2.62
EM20	2-1/2	2-1/2 - 8 NPT	2.50	1.00	3.50	3.25
EM24	3	3 - 8 NPT	3.00	1.00	4.38	3.87

PART NUMBER DEVELOPMENT

Example: RP2140 - EM06

Basic Part Number

Conduit Part Number

NOTES:

1. THE FUNCTION OF THE RP2140 END FITTING IS TO TERMINATE FLEXIBLE SHIELDING CONDUIT WITH A REUSABLE FITTING HAVING AN EXTERNAL TAPERED PIPE THREAD.
2. SEE TEXT FOR MATERIAL, FINISH, MARKING, ETC.
3. DIMENSIONS ARE IN INCHES.

Figure 5-5. RP2140 End Fitting, Conduit-to-Pipe Thread (Tapered)

RP2141 End Fitting, Conduit-to-Pipe Thread (Straight)

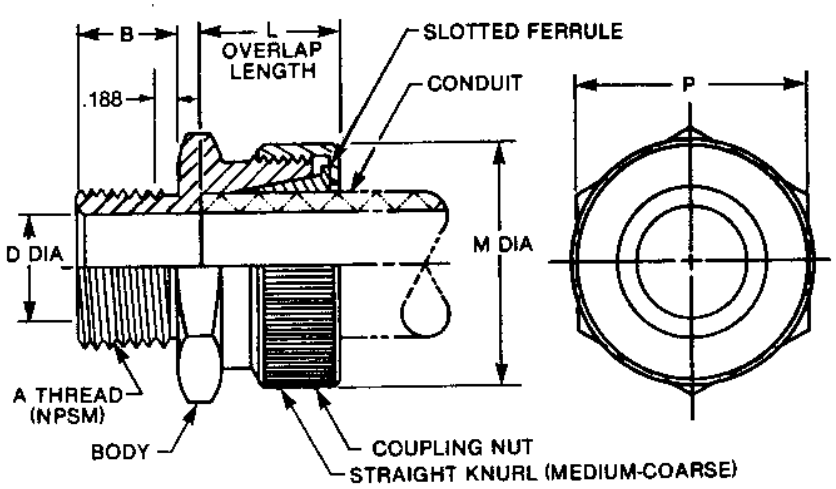

STANDARD CONDUIT		END FITTING					
CONDUIT PART NUMBER	CONDUIT SIZE (Nom. ID)	A PIPE THD (Class 2A)	B DIM ± .02	D DIA (Min.)	L OVERLAP LENGTH ± .06	M MAX OD COUPLING NUT	P MIN DIM WRENCH FLATS
EM02	1/4	1/4 - 18 NPSM	.75	.25	.75	.93	.75
EM03	3/8	3/8 - 18 NPSM	.75	.37	.75	1.12	.87
EM04	1/2	1/2 - 14 NPSM	.87	.50	.75	1.25	.96
EM05	5/8	3/4 - 14 NPSM	.87	.62	.75	1.43	1.37
EM06	3/4	3/4 - 14 NPSM	.87	.75	.75	1.62	1.18
EM08	1	1 - 11-1/2 NPSM	.87	1.00	1.00	1.81	1.50
EM10	1-1/4	1-1/4 - 11-1/2 NPSM	.87	1.25	1.00	2.18	1.81
EM12	1-1/2	1-1/2 - 11-1/2 NPSM	1.00	1.50	1.00	2.56	2.12
EM16	2	2 - 11-1/2 NPSM	1.19	2.00	1.00	3.06	2.62
EM20	2-1/2	2-1/2 - 8 NPSM	1.62	2.50	1.00	3.50	3.25
EM24	3	3 - 8 NPSM	1.69	3.00	1.00	4.38	3.87

PART NUMBER DEVELOPMENT

Example: RP2141 - EM06

Basic Part Number

Conduit Part Number

NOTES:

1. THE FUNCTION OF THE RP2141 END FITTING IS TO TERMINATE FLEXIBLE SHIELDING CONDUIT WITH A REUSABLE FITTING HAVING AN EXTERNAL STRAIGHT PIPE THREAD.
2. SEE TEXT FOR MATERIAL, FINISH, MARKING, ETC.
3. DIMENSIONS ARE IN INCHES.

Figure 5-6. RP2141 End Fitting, Conduit-to-Pipe Thread (Straight)

RP2200 Coupling, Conduit-to-Conduit

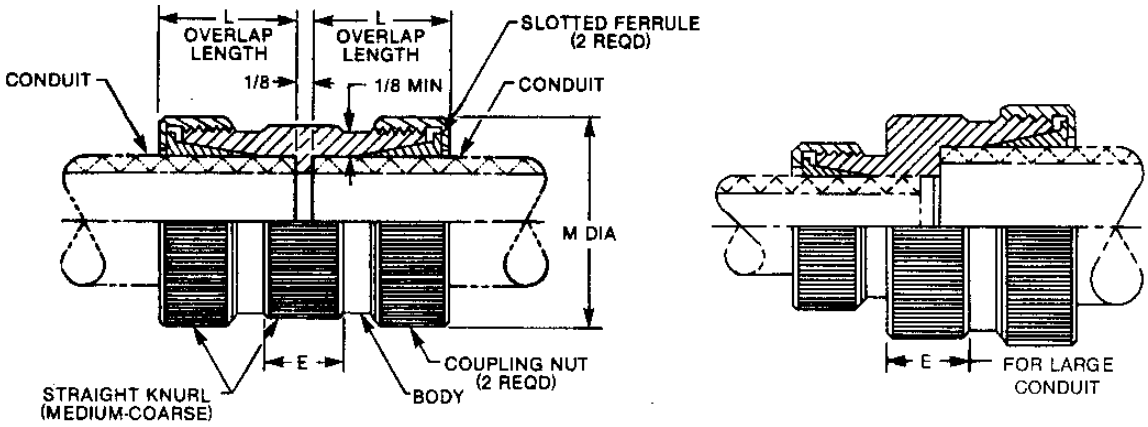

STYLE 01
CONNECTS TWO IDENTICAL SIZES OF CONDUIT

STYLE 02
CONNECTS TWO DIFFERENT SIZES OF CONDUIT

STANDARD CONDUIT		COUPLING		
CONDUIT PART NUMBER	CONDUIT SIZE (Nom. ID)	L OVERLAP LENGTH ± .06	E KNURL LENGTH ± .06	M OD (Max.)
EM02	1/4	.75	.50	.93
EM03	3/8	.75	.50	1.12
EM04	1/2	.75	.56	1.25
EM05	5/8	.75	.56	1.43
EM06	3/4	.75	.62	1.62
EM08	1	1.00	.62	1.81
EM10	1-1/4	1.00	.68	2.18
EM12	1-1/2	1.00	.68	2.56
EM16	2	1.00	.75	3.06
EM20	2-1/2	1.00	.75	3.50
EM24	3	1.00	.75	4.38

STYLE 01 PART NUMBER DEVELOPMENT

Example: RP2200-EM04

Basic Part Number
Conduit Part Number

STYLE 02 PART NUMBER DEVELOPMENT

Example: RP2200-EM06-10

Basic Part Number
Small Conduit Part Number
Large Conduit Part Number

NOTES

1. THE FUNCTION OF THE RP2200 CONDUIT-TO-CONDUIT COUPLING, STYLE 01, IS TO CONNECT TWO IDENTICAL SIZES OF FLEXIBLE SHIELDING CONDUIT; SYTLE 02 CONNECTS TWO DIFFERENT SIZES OF CONDUIT.
2. FOR STYLE 02 TO PROVIDE A TELESCOPING FEATURE, THE INSIDE DIAMETER OF THE LARGE CONDUIT MUST BE LARGER THAN THE OUTSIDE DIAMETER OF THE SMALL CONDUIT.
3. EXAMPLE OF STYLE 02 USE: AN INLINE CONNECTOR (OR SIMILAR COMPONENT) INSTALLED IN A CABLE CAN BE SHIELDED WITH THE AID OF THESE COUPLINGS. THE CONNECTOR IS ENCLOSED IN A SHORT LENGTH OF LARGE CONDUIT WHICH IS THEN COUPLED AT EACH END TO THE SMALL CONDUIT WHICH ENCLOSES THE CABLE.
4. SEE TEXT FOR MATERIAL, FINISH, MARKING, ETC.
5. DIMENSIONS ARE IN INCHES.

Figure 5-7. RP2200 Coupling, Conduit-to-Conduit

RP2210 Coupling, Conduit-to-Pipe

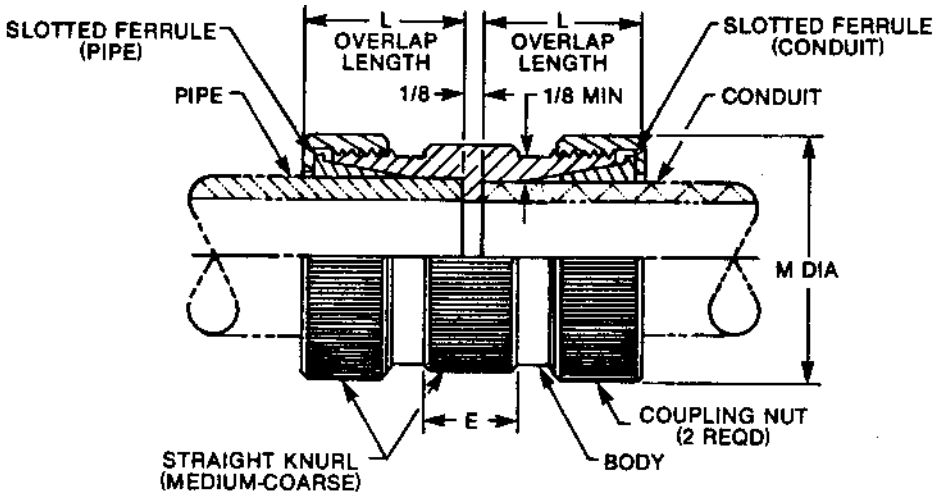

STANDARD CONDUIT		PIPE (MIL-T-20157)			COUPLING		
CONDUIT PART NUMBER	CONDUIT SIZE (Nom. ID)	PIPE SIZE (Nom. ID)	PIPE OD (Ref.)		L OVERLAP LENGTH ± .06	E KNURL LENGTH ± .06	M OD (Max.)
			OD	TOLERANCE			
EM02	1/4	1/4	.540	+.015 – .031	.75	.50	.93
EM03	3/8	3/8	.675	+.015 – .031	.75	.50	1.12
EM04	1/2	1/2	.840	+.015 – .031	.75	.56	1.25
EM06	3/4	3/4	1.050	+.015 – .031	.75	.62	1.62
EM08	1	1	1.315	+.015 – .031	1.00	.62	1.81
EM10	1-1/4	1-1/4	1.660	+.015 – .031	1.00	.68	2.18
EM12	1-1/2	1-1/2	1.900	+.015 – .031	1.00	.68	2.56
EM16	2	2	2.375	+.031 – .031	1.00	.75	3.06
EM20	2-1/2	2-1/2	2.875	+.031 – .031	1.00	.75	3.50
EM24	3	3	3.500	+.031 – .031	1.00	.75	4.38

PART NUMBER DEVELOPMENT

Example: RP2210 - EM08

Basic Part Number

Conduit Part Number

NOTES:

1. THE FUNCTION OF THE RP2210 COUPLING IS TO ATTACH FLEXIBLE SHIELDING CONDUIT TO RIGID SHIELDING CONDUIT (“BLACK IRON” PIPE).
2. SEE TEXT FOR MATERIAL, FINISH, MARKING, ETC.
3. DIMENSIONS ARE IN INCHES.

Figure 5-8. RP2210 Coupling, Conduit-to-Pipe

RP2311 Adapter for MIL-C-5015 Connector

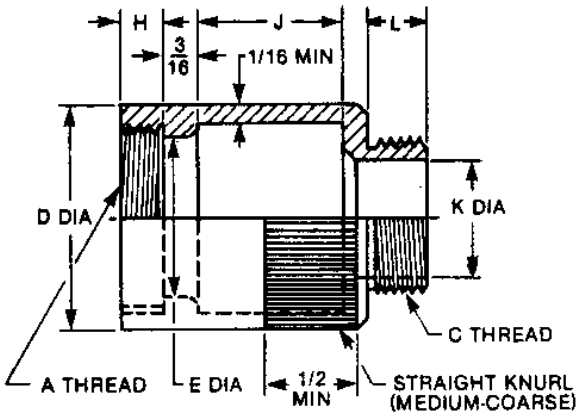

STYLE 01

FOR USE WHEN E DIAMETER IS GREATER THAN K DIAMETER

STYLE 02

SAME AS STYLE 01 EXCEPT J DIMENSION IS ZERO

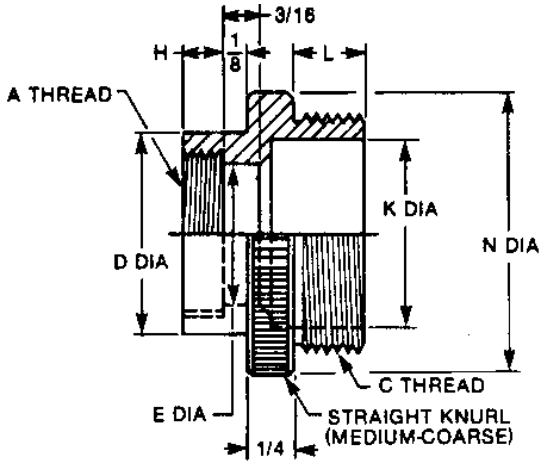

STYLE 03

FOR USE WHEN E DIAMETER IS EQUAL TO OR LESS THAN K DIAMETER

TABLE I

STANDARD CONDUIT		ADAPTER			
CONDUIT SIZE CODE	CONDUIT SIZE (Nom. ID)	C THREAD (Class 2A)	L ± .02	K DIA (Min.)	N DIA ± .02
02	1/4	.4375 - 28 UNEF	.21	.25	.687
03	3/8	.5625 - 24 UNEF	.25	.37	.812
04	1/2	.6875 - 24 UNEF	.25	.50	.937
05	5/8	.8125 - 20 UNEF	.31	.62	1.062
06	3/4	.9375 - 20 UNEF	.31	.75	1.187
08	1	1.250 - 18 UNEF	.37	1.00	1.500
10	1-1/4	1.5625 - 18 UNEF	.37	1.25	1.812
12	1-1/2	1.875 - 16 UN	.43	1.50	2.125
16	2	2.375 - 16 UN	.43	2.00	2.625
20	2-1/2	2.875 - 16 UN	.43	2.50	3.125
24	3	3.375 - 16 UN	.43	3.00	3.625

PART NUMBER DEVELOPMENT

Example: RP2311 - 06 - 08 - 01

- Basic Part Number
- A-Thread Code (See Table III)
- Conduit Size Code (See Table I)
- Style Code (See Drawings)

NOTES:

1. THE FUNCTION OF THE RP2210 COUPLING IS TO ATTACH FLEXIBLE SHIELDING CONDUIT TO RIGID SHIELDING CONDUIT (“BLACK IRON” PIPE).
2. SEE TEXT FOR MATERIAL, FINISH, MARKING, ETC.
3. DIMENSIONS ARE IN INCHES.

Figure 5-9. RP2311 Adapter for MIL-C-5015 Connector (Sheet 1 of 2)

RP2311 (Continued)

TABLE II MIL-C-5015 CONNECTOR CODE

CONN CODE	MFR	CLASS	SERIES
A	ALL MFR		MS-SERIES BACKSHELL
B	AMPHENOL	A	MS3100, MS3101, MS3106, 97-3100, 97-3101, 97-3106
C	AMPHENOL	E&R	MS3100, MS3101, MS3106, 69-3100, 69-3101, 69-3106
D	BENDIX	A,E,&R	MS3100, MS3101, MS3106, 10-214, 10-720, 10-721, 10-726
E	CANNON	A	MS3100, MS3101, MS3106, CA3101, CA3106
F	CANNON	E&R	MS3100, MS3101, MS3106

TABLE III A-THREAD CODE AND ADAPTER DIMENSIONS

A THREAD CODE	CONN SHELL SIZE	CONNECTOR CODE (See Table 2311-2)	A THREAD (Class 2B)	H ±.02	D DIA ±.02	E DIA ±.02	J (Style 01)* ±.03
01	8S	D	.375-32 UNEF	.18	.50	.28	.50
02	8S	B	.4375-27 UNS	.21	.56	.34	.53
03	8	C,E,F	.4375-28 UNEF	.21	.56	.34	.53
04	8S	A	.500-28 UNEF	.21	.62	.37	.56
04	10S	A,B,C,D,F	.500-28 UNEF	.21	.62	.37	.56
05	10S	E	.5625-24 UNEF	.25	.68	.45	.59
05	10SL	E,F	.5625-24 UNEF	.25	.68	.45	.59
06	10SL	A,B,C,D	.625-24 UNEF	.25	.75	.50	.62
06	12,12S	A,D,F	.625-24 UNEF	.25	.75	.50	.62
07	12,12S	B,C,E	.6875-24 UNEF	.25	.81	.57	.65
08	12SL	A	.750-20 UNEF	.28	.87	.62	.68
08	14,14S	A,B,C,D,E,F	.750-20 UNEF	.28	.87	.62	.68
09	16,16S	A,B,C,D,E,F	.875-20 UNEF	.28	1.00	.75	.71
10	18	A,B,C,D,E,F	1.000-20 UNEF	.28	1.12	.87	.75
11	20	B,D,E,F	1.125-18 UNEF	.28	1.25	1.00	.78
12	20	C	1.125-24 UNS	.28	1.25	1.00	.78
13	20,22	A	1.1875-18 UNEF	.28	1.31	1.06	.81
14	22	B,C,D,E,F	1.250-18 UNEF	.28	1.37	1.12	.87
15	24	B,C,D,E,F	1.375-18 UNEF	.28	1.50	1.25	1.00
16	24,28	A	1.4375-18 UNEF	.28	1.56	1.31	1.06
17	28	B,C,D,E,F	1.625-18 UNEF	.28	1.75	1.50	1.12
18	32	A	1.750-18 UNS	.28	1.87	1.62	1.18
19	32	D,E,F	1.875-16 UN	.28	2.00	1.75	1.25
20	32	B,C	1.9063-18	.28	2.03	1.78	1.28
21	36	A	2.000-18 UNS	.28	2.12	1.87	1.34
22	36	D	2.0625-16 UNS	.31	2.18	1.93	1.37
23	36	C	2.0625-20	.28	2.18	1.93	1.37
24	36	E,F	2.125-16 UN	.31	2.25	2.00	1.40
25	36	B	2.125-18	.28	2.25	2.00	1.40
26	40	A	2.250-16 UN	.31	2.37	2.12	1.50
27	40	D	2.3125-16 UNS	.31	2.43	2.18	1.56
28	40	B,E,F	2.375-16 UN	.31	2.50	2.25	1.62
29	44	B,F	2.625-16 UN	.31	2.75	2.50	1.87
30	48	F	2.8125-18	.28	2.93	2.68	2.06
31	48	B	2.875-16 UN	.31	3.00	2.75	2.12

* FOR STYLE 2, J DIMENSION IS ZERO.

Figure 5-9. RP2311 Adapter for MIL-C-5015 Connector (Sheet 2 of 2)

RP2321 Adapter for Triaxial Connector

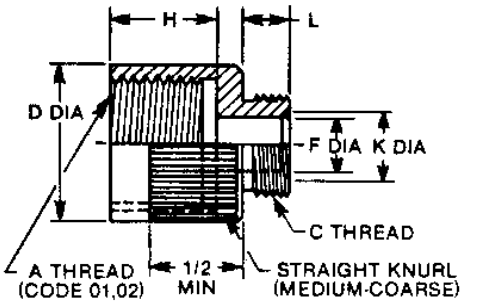

STYLE 1 — ADAPTER WITH INTERNAL "A" THREAD

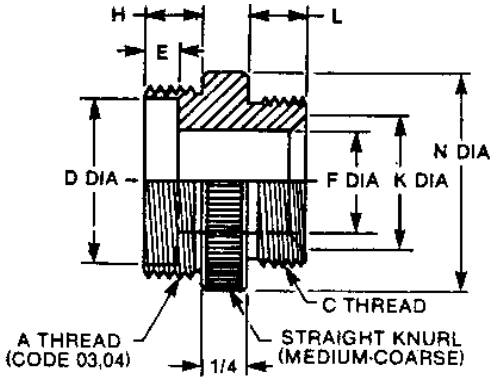

STYLE 2 — ADAPTER WITH EXTERNAL "A" THREAD

TABLE I

STANDARD CONDUIT		ADAPTER			
CONDUIT SIZE CODE	CONDUIT SIZE (Nom. ID)	C THREAD (Class 2A)	L ± .02	K DIA (Min.)	N DIA ± .02
02	1/4	.4375 - 28 UNEF	.21	.25	.687
03	3/8	.5625 - 24 UNEF	.25	.37	.812
04	1/2	.6875 - 24 UNEF	.25	.50	.937
05	5/8	.8125 - 20 UNEF	.31	.62	1.062
06	3/4	.9375 - 20 UNEF	.31	.75	1.187
08	1	1.250 - 18 UNEF	.37	1.00	1.500
10	1-1/4	1.5625 - 18 UNEF	.37	1.25	1.812
12	1-1/2	1.875 - 16 UN	.43	1.50	2.125
16	2	2.375 - 16 UN	.43	2.00	2.625
20	2-1/2	2.875 - 16 UN	.43	2.50	3.125
24	3	3.375 - 16 UN	.43	3.00	3.625

PART NUMBER DEVELOPMENT

Example: RP2321 - 01 - 08

Basic Part Number

A-Thread Code (See Table II)

Conduit Size Code (See Table I)

TABLE II

A THREAD CODE	CONNECTOR PART NO.		A THREAD	D DIA	E	F DIA	H	CABLE (Ref.)	
	ITT/CANNON	FORMERLY GREMAR						TYPE	OD
01	152105-2380	5633	.750 - 16 UNF-2B	.875	---	.297	.562	RG-233/U	.216
								RG-58C/U	.195
02	152100-2390	7991	.875 - 20 UNEF-2B	1.000	---	.515	.500	RG-214/U	.425
								RG-98/U	.420
03	152190-0000	16312	1.0625 -18 UNEF-2A	.922	.187	.564	.312	RG-14A/U	.545
								RG-293A/U	.545
								*TRF-8	.500
04		11865	1.0625 - 18 UNEF-2A	.922	.227	.564	.335	RG-14A/U	.545
								RG-293A/U	.545
								*TRF-8	.500

*TIMES WIRE & CABLE CO.

NOTES:

1. THE FUNCTION OF THE RP2321 COUPLES TRIAXIAL CONNECTORS TO RP2100, RP2110, OR RP2120 END FITTINGS.
2. RP2321 SUPERSEDES RP2320; THEREFORE, AND REQUIREMENT FOR AN RP2320 WILL BE SATISFIED WITH AN RP2321.
3. SEE TEXT FOR MATERIAL, FINISH, MARKING, ETC.
4. DIMENSIONS ARE IN INCHES.

Figure 5-10. RP2321 Adapter for Triaxial Connector

RP2330 Adapter for Coaxial Connector

TABLE I

STANDARD CONDUIT		ADAPTER (CONDUIT END)			
CONDUIT SIZE CODE	CONDUIT SIZE (Nom. ID)	C THREAD (Class 2A)	L ±.02	K DIA (Min.)	N DIA ±.02
02	1/4	.4375 - 28 UNEF	.21	.25	.687
03	3/8	.5625 - 24 UNEF	.25	.37	.812
04	1/2	.6875 - 24 UNEF	.25	.50	.937
05	5/8	.8125 - 20 UNEF	.31	.62	1.062
06	3/4	.9375 - 20 UNEF	.31	.75	1.187
08	1	1.250 - 18 UNEF	.37	1.00	1.500
10	1-1/4	1.5625 - 18 UNEF	.37	1.25	1.812
12	1-1/2	1.875 - 16 UN	.43	1.50	2.125
16	2	2.375 - 16 UN	.43	2.00	2.625
20	2-1/2	2.875 - 16 UN	.43	2.50	3.125
24	3	3.375 - 16 UN	.43	3.00	3.625

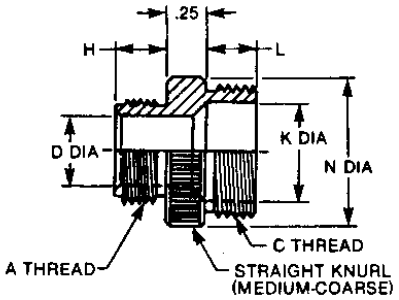

TABLE II

ADAPTER (CONNECTOR END)				COAXIAL CABLE (Ref.)	
A THREAD CODE	A THREAD (Class 2A)	H +.03 −.00	D DIA +.02 −.00	TYPE	OD
02	.375 - 32 UNEF	.21	.226	RG-58, RG-223	.195, .216
04	.4375 - 28 UNEF	.25	.345	RG-5, RG-6, RG-21	.332
06	.625 - 24 UNEF	.31	.433	RG-9, RG-214	.420, .425
08	.6875 - 24 UNEF	.31	.568	RG-14, RG-293	.545
10	.8125 - 20 UNEF	.31	.650	RG-57, RG-294	.625, .630
12	1.250 - 18 UNEF	.31	.895	RG-17	.870

PART NUMBER DEVELOPMENT

Example: RP2330 - 02 - 04 - N

- Basic Part Number
- A Thread Code (See Table II and Note 3)
- Conduit Size Code (See Table I)
- Material Code (No letter indicates steel) N - Designates Nylon (See Note 4)

NOTES:

1. THE RP2330 ADAPTER COUPLES COAXIAL CONNECTORS TO RP2100, RP2110, OR RP2120 END FITTINGS.
2. SEE TEXT FOR MATERIAL, FINISH, MARKING, ETC.
3. SELECT AN A-THREAD FROM TABLE II WHICH MATCHES THAT OF THE BACK NUT ON THE CONNECTOR BEING USED. IF NONE OF THE A-THREADS MATCH, SUBSTITUTE THE DESIRED A-THREAD INFORMATION IN LIEU OF THE A-THREAD CODE IN THE PART NUMBER. FOR EXAMPLE, AN ADAPTER WITH A 28 THREAD OF 5/16" H-LENGTH FOR A 3/8" CONDUIT WOULD HAV E THE PART NUMBER RP2330-1/2-28-5/16-03.
4. IF A PARTICULAR INSTALLATION REQUIRES THAT THE CONNECTOR BODY BE "FLOATED" OFF GROUND, THAT IS, INSULATED FROM THE CONDUIT, USE THE MATERIAL CODE LETTER "N" IN THE PART NUMBER. THIS LETTER INDICATES THE NON-CONDUCTING MATERIAL, NYLON.
5. THE RP2440 NYLON ADAPTER PROVIDES AN OPTIONAL METHOD OF INSULATING CONNECTOR BODY FROM CONDUIT.
6. DIMENSIONS ARE IN INCHES.

Figure 5-11. RP2330 Adapter for Coaxial Connector (Sheet 1 of 3)

RP2330 (Continued)

NOTES (Continued):

7. THIS RP2330 ADAPTER IS DESIGNED TO REPLACE THE GLAND NUT (A SIMPLE ONE-PIECE THREADED COMPONENT) AT THE REAR OF A MIL-C-39012 CONNECTOR, IN ORDER TO PROVIDE A MEANS FOR TERMINATING FLEXIBLE SHIELDING CONDUIT. HOWEVER, THE MIL-C-39012 SPECIFICATION DOES NOT PROVIDE CONFIGURATION CONTROL OVER MOST OF THE INTERNAL COMPONENTS. AS A RESULT, (1) THE THREAD SIZES FOR THE REAR END OF COAXIAL CONNECTORS MAY VARY AMONG MANUFACTURERS, AND (2) SEVERAL DIFFERENT INTERNAL DESIGNS HAVE BEEN PRODUCED, SOME OF WHICH ARE NOT COMPATIBLE WITH THE EXISTING RP2330 ADAPTER.

   BECAUSE THERE IS NOT CONFIGURATION CONTROL, THE GOVERNMENT DESIGNATION (SUCH AS PART NUMBER M39012/01-0015) FOR AN M39012 CONNECTOR GIVES NO INDICATION AS TO WHICH INTERNAL DESIGN IS CONTAINED IN THE CONNECTOR, FOR EXAMBLE, THE M39012/01-0015, SUPPLIED BY AUTOMATIC CONNECTOR, INC., MAY HAVE THE COMPATIBLE ONE-PIECE GLAND-NUT DESIGN OR IT MAY HAVE A NEWER DEISGN (CALLED WEDGE-LOCK) WHICH INCLUDES A GLAND NUT WITH A CAPTIVE FREE-SPINNING FERRULE THAT PRESSES THE FANNED-OUT CABLE-BRAID AGAINST A CONICAL BODY WITHOUT ROTATING, AS THE GLAND NUT IS TIGHTENED. THIS NEWER DESIGN IS NOT COMPATIBLE WITH THE EXISTING ONE-PIECE RP2330 ADAPTER BECAUSE THE ADAPTER TENDS TO CUT THE CABLE-BRAID IN A SAWING ACTION AS IT IS TIGHTENED.

   AS AN INTERIM SOLUTION TO MAKING THE RP2330 ADAPTER COMPATIBLE WITH THE WEDGE-LOCK DESIGN (FOR EXAMPLE) AND ADAPTER-FERRULE, TO BE USED IN CONJUNCTION WITH THE RP2330 ADAPTER, MUST BE PROVIDED. THIS ADAPTER-FERRUL SHOULD DUPLICATE THE BASIC SHAPE OF THE FREE-SPINNING FERRULE CONTAINED IN THE CONNECTOR.

   TABLE III LISTS THREE SIZES OF ADAPTER FERRULE (FOR THE “WEDGE-LOCK” DESIGN ONLY) TO BE USED WITH THE RP2330 ADAPTER. NOTE THAT THE INSIDE DIMENSIONS OF THE FERRULE RESTRICT THE SIZE OF COAXIAL CABLE DIAMETER WHICH CAN BE USED. NOTE THAT THIS FERRULE DOES NOT PROVIDE FOR RETENTION OF THE ORIGINAL WATERTIGHT INTEGRITY OF THE COMPLETE CONNECTOR.

   ANOTHER METHOD OF OBTAINING AN ADAPTER FERRULE IS TO USE THE ACTUAL FERRULE PORTION OF THE CONNECTOR BY CUTTIN G IT FROM THE GLAND NUT.

   COMMENT: A BETTER METHOD OF TERMINATING FLEXIBLE SHIELDING CONDUIT TO A COAXIAL CONNECTOR MAY BE AN ADAPTER DESIGNED TO ATTACH TO THE OUTSIDE OF THE CONNECTOR RATHER THAN DISTURBING THE INTERNAL COMPONENTS OF THE CONNECTOR ITSELF. THE REAR END OF THE ADAPTER WOULD PROVIDE THREADS FOR ATTACHING A CONDUIT END-FITTING.

Figure 5-11. RP2330 Adapter for Coaxial Connector (Sheet 2 of 3)

RP2330 (Continued)

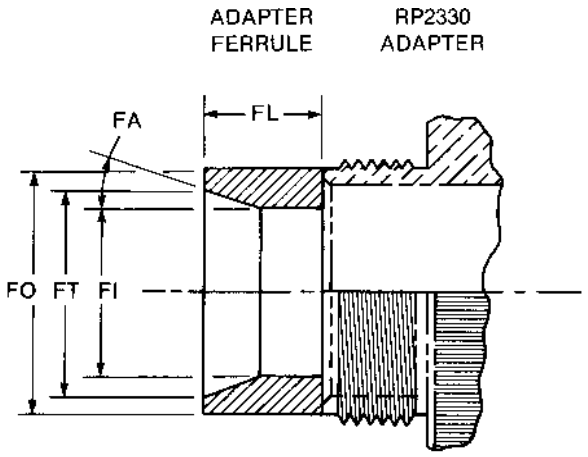

TABLE III

ADAPTER FERRULE (FOR "WEDGE-LOCK" DESIGN ONLY)					
A THREAD CODE (REF.)	FO DIA +.000 −.003	FI DIA +.005 −.000	FT DIA +.003 −.003	FA ANGLE +1/2° −1/2°	FL LENGTH +.005 −.005
02					
04	0.398	0.235	0.297	24	0.158
06					
08	0.637	0.460	0.530	21.5	0.221
10	0.738	0.568	0.640	18	0.385
12					

Figure 5-11. RP2330 Adapter for Coaxial Connector (Sheet 3 of 3)

RP2340 Adapter for MIL-C-26482 Connector

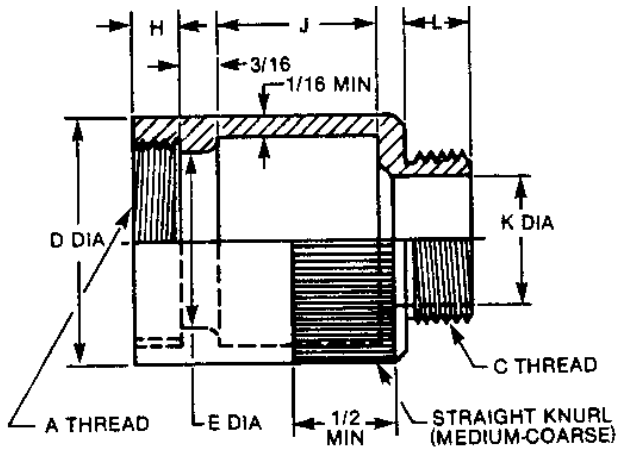

STYLE 01

FOR USE WHEN E DIAMETER IS GREATER THAN K DIAMETER

STYLE 02

SAME AS STYLE 01 EXCEPT J DIMENSION IS ZERO

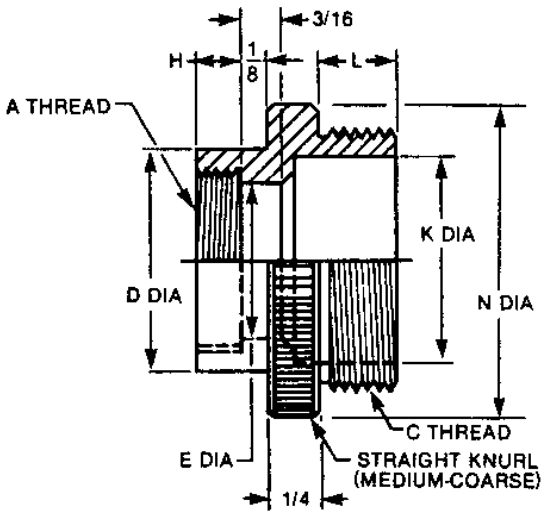

STYLE 03

FOR USE WHEN E DIAMETER IS EQUAL TO OR LESS THAN K DIAMETER

TABLE I

STANDARD CONDUIT		ADAPTER			
CONDUIT SIZE CODE	CONDUIT SIZE (Nom. ID)	C THREAD (Class 2A)	L ±.02	K DIA (Min.)	N DIA ±.02
02	1/4	.4375 - 28 UNEF	.21	.25	.687
03	3/8	.5625 - 24 UNEF	.25	.37	.812
04	1/2	.6875 - 24 UNEF	.25	.50	.937
05	5/8	.8125 - 20 UNEF	.31	.62	1.062
06	3/4	.9375 - 20 UNEF	.31	.75	1.187
08	1	1.250 - 18 UNEF	.37	1.00	1.500
10	1-1/4	1.5625 - 18 UNEF	.37	1.25	1.812
12	1-1/2	1.875 - 16 UN	.43	1.50	2.125
16	2	2.375 - 16 UN	.43	2.00	2.625
20	2-1/2	2.875 - 16 UN	.43	2.50	3.125
24	3	3.375 - 16 UN	.43	3.00	3.625

PART NUMBER DEVELOPMENT

Example: RP2340 - 15 - 08 - 03

- Basic Part Number
- A Thread Code (See Table II)
- Conduit Size Code (See Table I)
- Style Code (See Drawings)

Figure 5-12. RP2340 Adapter for MIL-C-26482 Connector (Sheet 1 of 2)

RP2340 (Continued)

TABLE II

A THREAD CODE	CONN SHELL SIZE	A THREAD (Class 2B)	H (Note 3) ±.02	D DIA ±.02	E DIA ±.02	J (Style 01)* ±.03
07	8	.4375 - 28 UNEF	(Note 4)	.59	.34	.87
09	10	.5625 - 24 UNEF	(Note 4)	.71	.45	.87
11	12	.6875 - 24 UNEF	(Note 4)	.84	.57	.87
13	14	.8125 - 20 UNEF	.21	.96	.68	.87
15	16	.9375 - 20 UNEF	.21	1.09	.81	.87
17	18	1.0625 - 18 UNEF	.21	1.21	.93	1.06
19	20	1.1875 - 18 UNEF	(Note 4)	1.34	1.06	1.18
21	22	1.3125 - 18 UNEF	(Note 4)	1.46	1.18	1.62
23	24	1.4375 - 18 UNEF	.21	1.59	1.31	1.68

*FOR STYLE 02, J DIMENSION IS ZERO.

NOTES:

1. THE RP2340 ADAPTER COUPLES MIL-C-26482 CONNECTORS (MS3110, MS3111, OR MS3116 SERIES) TO RP2100, RP 2110, OR RP2120 END FITTINGS.
2. FOR MIL-C-26482, SERIES 2 THE RP2350 ADAPTER MAY BE USED.
3. THE THREAD LENGTH, H, IS CRITICAL. IF A DIE IS USED TO CUT THE THREAD, THE H DIMENSION IS AS SHOWN. IF A LATHE IS USED TO CUT THE THREAD, REDUCE H DIMENSION BY 0.06 INCHES.
4. DIMENSION NOT AVAILABLE
5. SEE TEXT FOR MATERIAL, FINISH, MARKING, ETC.
6. SEE PARAGRAPH 7.7 FOR CONDITIONS FOR USE OF ALUMINUM CONNECTOR BACKSHELLS.
7. DIMENSIONS ARE IN INCHES.

Figure 5-12. RP2340 Adapter for MIL-C-26482 Connector (Sheet 2 of 2)

RP2350 Adapter for MS3155-Type Connectors

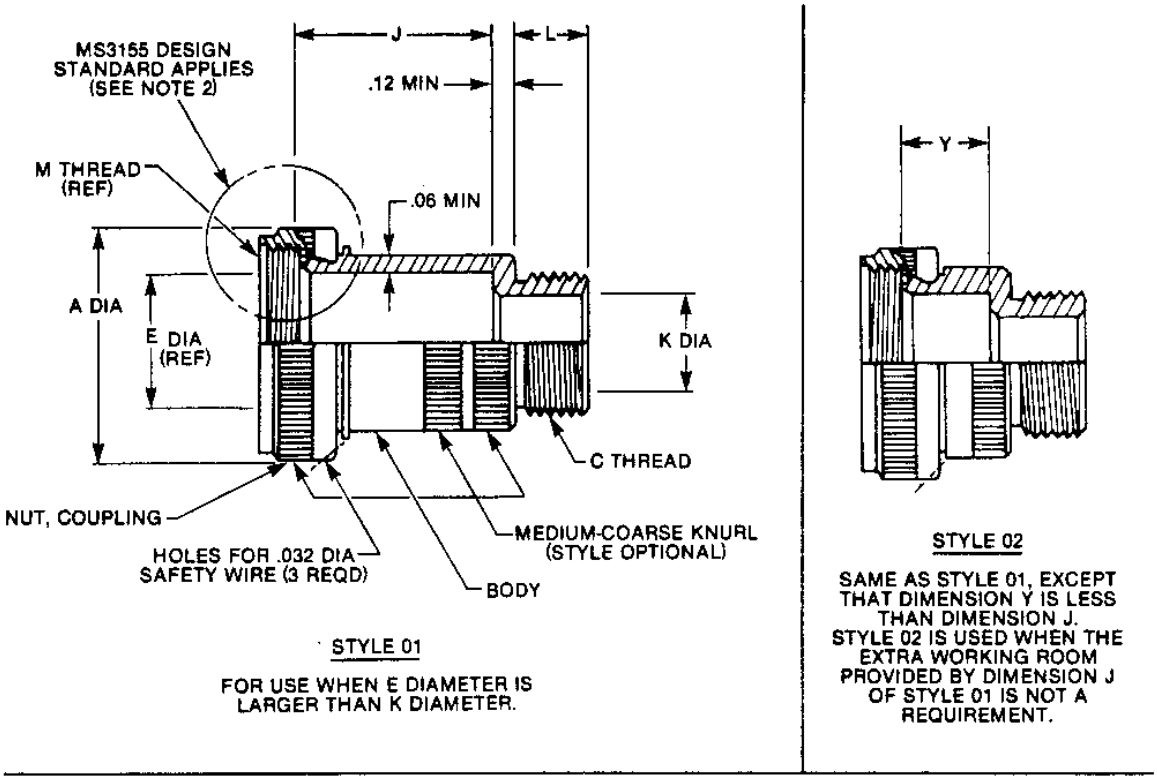

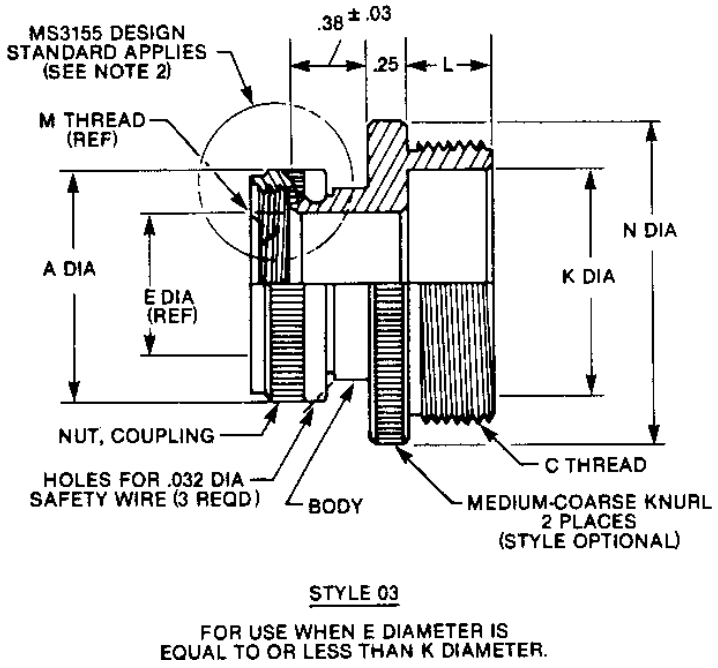

Figure 5-13. RP2350 Adapter for MS3155-Type Connectors (Sheet 1 of 2)

RP2350 (Continued)

TABLE I

CONN DASH NO.	CONNECTOR SHELL SIZE				ADAPTER				
	NAS1599 AND MIL-C-83723 (Series 1 & 3)	MIL-C-5015 (MS3400 Series) *	MIL-C-81703 (NAVY) (Series 3)	MIL-C-26482 (Series 2) **	A DIA (Max.)	M THREAD (Class 2B) (Ref.) NOTE 3	E DIA (Ref.) NOTE 3	J ±.03 (Style 01)	Y ±.03 (Style 02)
03	– – –	– – –	3	– – –	.669	.562 - 24 UNEF	.270	1.06	.62
08	8	8S	– – –	8	.617	.500 - 20 UNF	.270	1.06	.62
10	10	10S,10SL	– – –	10	.734	.625 - 24 UNEF	.375	1.06	.69
12	12	12,12S	7	12	.858	.750 - 20 UNEF	.511	1.06	.69
14	14	14,14S	12	14	.984	.875 - 20 UNEF	.585	1.06	.75
16	16	16,16S	19	16	1.112	1.000 - 20 UNEF	.710	1.06	.75
18	18	18	27	18	1.218	1.062 - 18 UNEF	.789	1.12	.75
20	20	20	37	20	1.345	1.188 - 18 UNEF	.914	1.38	.81
22	22	22	– – –	22	1.468	1.312 - 18 UNEF	1.039	1.83	.81
24	24	24	– – –	24	1.593	1.438 - 18 UNEF	1.154	1.88	.81
28	– – –	28	– – –	– – –	1.969	1.750 - 18 UNS	1.389	2.30	.88
32	– – –	32	– – –	– – –	2.219	2.000 - 18 UNS	1.635	2.55	.88
36	– – –	36	– – –	– – –	2.469	2.250 - 16 UN	1.850	2.80	.88
40	– – –	40	– – –	– – –	2.719	2.500 - 16 UN	2.065	3.05	.94
44	– – –	44	– – –	– – –	2.969	2.750 - 16 UN	2.320	3.55	.94
48	– – –	48	– – –	– – –	3.219	3.000 - 16 UN	2.570	3.62	.94
61	– – –	– – –	61	– – –	1.653	1.500 - 18 UNEF	1.194	1.88	.81

*FOR MS3100, MS3101, OR MS3106 CONNECTORS, USE RP2311 ADAPTER.
**FOR MS3110, MS3111, OR MS3116 CONNECTORS, USE RP2340 ADAPTER.

TABLE II

STANDARD CONDUIT		ADAPTER			
CONDUIT SIZE CODE	CONDUIT SIZE (Nom. ID)	C THREAD (Class 2A)	L ±.02	K DIA (Min.)	N DIA ±.02
02	1/4	.4375 - 28 UNEF	.21	.25	.687
03	3/8	.5625 - 24 UNEF	.25	.37	.812
04	1/2	.6875 - 24 UNEF	.25	.50	.937
05	5/8	.8125 - 20 UNEF	.31	.62	1.062
06	3/4	.9375 - 20 UNEF	.31	.75	1.187
08	1	1.250 - 18 UNEF	.37	1.00	1.500
10	1-1/4	1.5625 - 18 UNEF	.37	1.25	1.812
12	1-1/2	1.875 - 16 UN	.43	1.50	2.125
16	2	2.375 - 16 UN	.43	2.00	2.625
20	2-1/2	2.875 - 16 UN	.43	2.50	3.125
24	3	3.375 - 16 UN	.43	3.00	3.625

PART NUMBER DEVELOPMENT

Example: RP2350 - 16 - 06 - 01 A

- Basic Part Number
- Connector Dash Number (See Table I)
- Conduit Size Code (See Table II)
- Style Code (See Drawings)
- Material Code
  No letter indicates steel,
  A - Aluminum Alloy (See Note 5)

NOTES:

1. THE RP2350 ADAPTER COUPLES CONNECTORS LISTED IN TABLE 1 TO RP2100, RP2110, OR RP2120 CONDUIT END FITTINGS.
2. THE COUPLING NUT END OF THIS ADAPTER SHALL CONFORM TO MILITARY STANDARD MS3155 (NAVY), “CONNECTOR, ELECTRIC, REAR ACCESSORY DESIGN STANDARD”. MS3155 TAKES PRECEDENCE OVER THIS SPECIFICATION.
3. THE E DIAMETER AND M-THREAD OF THIS SPECIFICATION ARE THE SAME AS THE E DIAMETER AND M-THREAD OF MS3155, AND ARE INCLUDED FOR REFERENCE PURPOSES.
4. SEE TEXT FOR MATERIAL, FINISH, MARKING, ETC.
5. ALUMINUM ALLOY MAY BE SPECIFIED PROVIDED THAT MINIMUM SPACING REQUIREMENTS FOR THE ADAPTER (BACKSHELL), DELINEATED IN PARAGRAPH 7.7 ARE MET.
6. DIMENSIONS ARE IN INCHES.

Figure 5-13. RP2350 Adapter for MS3155-Type Connectors (Sheet 2 of 2)

RP2360 Adapter for MIL-C-28840(EC) Backshell

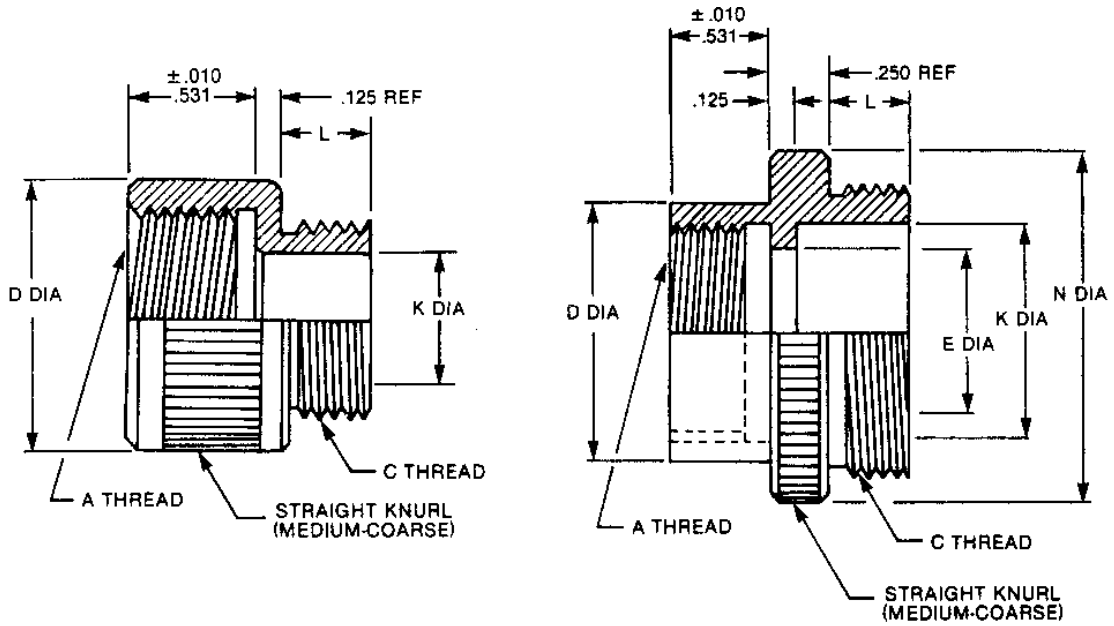

TABLE I

STANDARD CONDUIT		ADAPTER			
CONDUIT SIZE CODE	CONDUIT SIZE (Nom. ID)	C THREAD (Class 2A)	L ±.02	K DIA (Min.)	N DIA ±.02
02	1/4	.4375 - 28 UNEF	.21	.25	.687
03	3/8	.5625 - 24 UNEF	.25	.37	.812
04	1/2	.6875 - 24 UNEF	.25	.50	.937
05	5/8	.8125 - 20 UNEF	.31	.62	1.062
06	3/4	.9375 - 20 UNEF	.31	.75	1.187
08	1	1.250 - 18 UNEF	.37	1.00	1.500
10	1-1/4	1.5625 - 18 UNEF	.37	1.25	1.812
12	1-1/2	1.875 - 16 UN	.43	1.50	2.125
16	2	2.375 - 16 UN	.43	2.00	2.625
20	2-1/2	2.875 - 16 UN	.43	2.50	3.125
24	3	3.375 - 16 UN	.43	3.00	3.625

PART NUMBER DEVELOPMENT

Example: RP2360 - 06 - 08 - 01

- Basic Part Number
- A Thread Code (See Table II)
- Conduit Size Code (See Table I)
- Style Code (See Drawings)

Figure 5-14. RP2360 Adapter for MIL-C-28840(EC) Backshell (Sheet 1 of 2)

RP2360 (Continued)

A THREAD CODE	SHELL SIZE (Ref.)	A THREAD (Class 2B)	D DIA ±.015	E DIA ±.015
01	B,C	.625-24 UNEF	.875	.453
02	B,C	.750-20 UNEF	1.000	.578
03	C	.875-20 UNEF	1.125	.703
04	D,E	1.000-20 UNEF	1.250	.828
05	C,D,F	1.118-18 UNEF	1.438	1.000
06	D,E,F,G	1.438-18 UNEF	1.688	1.250
07	F,G,H	1.750-18 UNS	2.000	1.562
08	G,H,J	2.000-18 UNS	2.250	1.813
09	J	2.250-16 UNS	2.500	2.062
10	C,D,E	1.125-18 UNEF	1.375	.938
11	C,D,E,F,G	1.250-18 UNEF	1.500	1.078
12	D,E,F,G	1.625-18 UNEF	1.875	1.438
13	F,G,H	1.875-18 UNS	2.125	1.688
14	G,H,J	2.125-16 UN	2.375	1.938
15	J	2.750-16 UN	3.000	2.563

NOTES:

1. THE RP2360 ADAPTER PROVIDES A NON-ENVIRONMENTAL COUPLING BETWEEN THE MIL-C-28840(EC) BACKSHELLS AND THE RP2100, RP2110, OR RP2120 END FITTINGS.
   SPECIFICALLY, THE A-THREAD OF THIS ADAPTER (A-THREAD CODES 01 THRU 09) MATES WITH THE V-THREAD OF THE M28840/6 BACKSHELL (STRAIGHT), THE M23340/8 BACKSHELL (90), OR THE M28840/9 BACKSHELL (45).
   THE A-THREAD CODES 10 THRU 15 MATE WITH THE C-THREADS OF M28840/5, M28840/25 OR M28840/27. (THE A-THREAD CODES 03 AND 04 MATE WITH THESE C-THREADS ALSO).
2. THIS ADAPTER WILL ALSO MATE WITH THE PLUG ASSEMBLIES M28840/26, M28840/28 OR M28840/29 SINCE THE BACKSHELLS USED IN THESE PLUG ASSEMBLIES ARE THE M28840/6, M28840/8 AND M28840/9 TYPES RESPECTIVELY.
3. THE COLUMN LABELED “SHELL SIZE (Ref)” IS PRESENTED FOR REFERENCE PURPOSES ONLY. IT DOES NOT DIRECTLY EFFECT THE SELECTION OF AN ADAPTER SIZE TO MATE WITH A PARTICULAR BACKSHELL SIZE. ONLY THE C-THREAD OR THE V-THREAD SIZE OF A BACKSHELL DETERMINES WHICH A-THREAD SIZE OF ADAPTER TO USE.
4. DIMENSION NOT AVAILABLE
5. SEE TEXT FOR MATERIAL, FINISH, MARKING, ETC.
6. SEE PARAGRAPH 7.7 FOR CONDITIONS FOR USE OF ALUMINUM CONNECTOR BACKSHELLS.
7. DIMENSIONS ARE IN INCHES.

Figure 5-14. RP2360 Adapter for MIL-C-28840(EC) Backshell (Sheet 2 of 2)

RP2400 Adapter for MIL-S-24235/1 Stuffing Tube

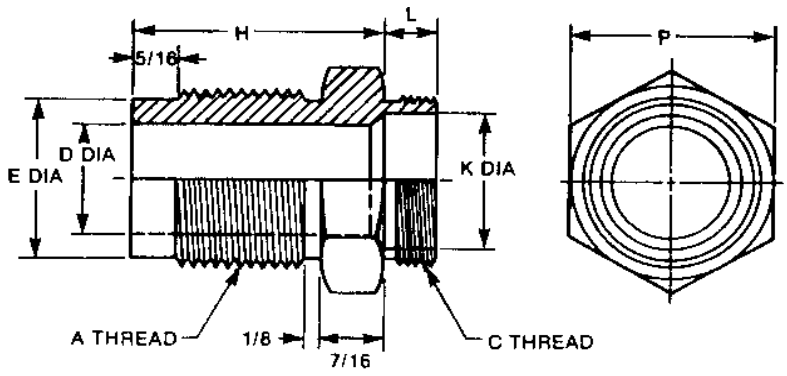

TABLE I

STANDARD CONDUIT		ADAPTER		
CONDUIT SIZE CODE	CONDUIT SIZE (Nom. ID)	C THREAD (Class 2A)	L ±.02	K DIA (Min.)
02	1/4	.4375 - 28 UNEF	.21	.25
03	3/8	.5625 - 24 UNEF	.25	.37
04	1/2	.6875 - 24 UNEF	.25	.50
05	5/8	.8125 - 20 UNEF	.31	.62
06	3/4	.9375 - 20 UNEF	.31	.75
08	1	1.250 - 18 UNEF	.37	1.00
10	1-1/4	1.5625 - 18 UNEF	.37	1.25
12	1-1/2	1.875 - 16 UN	.43	1.50
16	2	2.375 - 16 UN	.43	2.00
20	2-1/2	2.875 - 16 UN	.43	2.50
24	3	3.375 - 16 UN	.43	3.00

PART NUMBER DEVELOPMENT

Example: RP2400 - 12 - 10

- Basic Part Number
- A Thread Code (See Table II)
- Conduit Size Code (See Table I)

TABLE II

ADAPTER						MIL-S-24235/1
A THREAD CODE	A THREAD (Class 2A)	D DIA ±.005	E DIA ±.005	H DIM ±.02	P DIM ±.02	STUFFING TUBE SIZE
02	1.125 - 12 UNF	0.609	0.984	1.56	1.25	1
05	1.3125 - 12 UN	0.812	1.171	1.56	1.43	2
08	1.625 - 12 UN	1.062	1.484	1.56	1.78	3
11	1.8125 - 12 UN	1.265	1.671	1.87	1.93	4
12	2.0625 - 12 UN	1.437	1.921	2.00	2.25	5
14	2.3125 - 12 UN	1.625	2.173	2.12	2.46	6
15	2.6875 - 12 UN	1.875	2.531	2.31	2.81	7
17	3.000 - 12 UN	2.187	2.850	2.31	3.09	8
18	3.125 - 12 UN	2.312	2.968	2.37	3.28	9

NOTES:

1. THE RP2400 ADAPTER COUPLES MIL-S-24235/1 STUFFING TUBES TO RP2100, RP2110, OR RP2120 END FITTINGS.
2. SEE TEXT FOR MATERIAL, FINISH, MARKING, ETC.
3. THE MAXIMUM “P” DIMENSION OF TABLE II SHOULD BE LARGER THAN THE “C” THREAD OUTSIDE DIMENSION WHEN THE REQUIRED “C” AND “A” THREAD COMBINATION WOULD RESULT IN “C” O D LARGER THAN THE “P” DIMENSION GIVEN FOR THE REQUIRED “A” THREAD O D.
4. DIMENSIONS ARE IN INCHES.

Figure 5-15. RP2400 Adapter for MIL-S-24235/1 Stuffing Tube

RP2411 Adapter for Miscellaneous Threaded Fittings

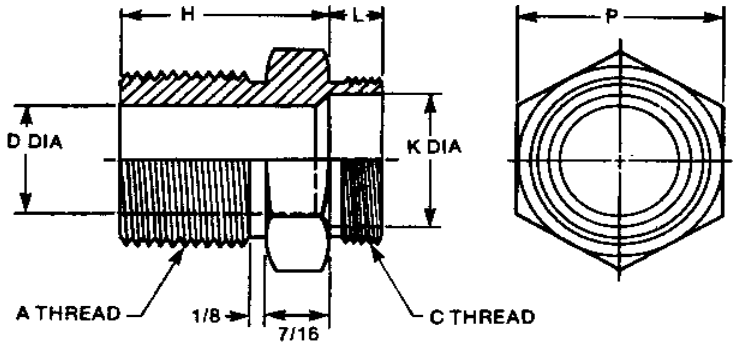

TABLE I

STANDARD CONDUIT		ADAPTER		
CONDUIT SIZE CODE	CONDUIT SIZE (Nom. ID)	C THREAD (Class 2A)	L ±.02	K DIA (Min.)
02	1/4	.4375 - 28 UNEF	.21	.25
03	3/8	.5625 - 24 UNEF	.25	.37
04	1/2	.6875 - 24 UNEF	.25	.50
05	5/8	.8125 - 20 UNEF	.31	.62
06	3/4	.9375 - 20 UNEF	.31	.75
08	1	1.250 - 18 UNEF	.37	1.00
10	1-1/4	1.5625 - 18 UNEF	.37	1.25
12	1-1/2	1.875 - 16 UN	.43	1.50
16	2	2.375 - 16 UN	.43	2.00
20	2-1/2	2.875 - 16 UN	.43	2.50
24	3	3.375 - 16 UN	.43	3.00

PART NUMBER DEVELOPMENT

Example: RP2411 - 04 - 08

Basic Part Number

A Thread Code (See Table II)

Conduit Size Code (See Table I)

TABLE II

ADAPTER				
A THREAD CODE	A THREAD (Class 2A)	D DIA ±.005	H DIM ±.02	P DIM ±.02
01	1-1/8 - 14 N	0.500	1.25	1.25
03	1.288 - 14 N	0.750	1.25	1.43
04	3/4 - 14 NPSM	0.750	1.25	1.37
06	1 - 11-1/2 NPSM	1.000	1.25	1.68
07	1-1/4 - 11-1/2 NPSM	1.000	1.25	1.81
09	1-1/4 - 11-1/2 NPSM	1.180	1.25	1.81
10	2.025 - 11-1/2 N	1.250	1.56	2.18
13	2-1/4 - 11-1/2 N	1.500	1.69	2.50
16	2-1/2 - 8 NPSM	2.000	2.00	3.00
19	3 - 8 NPSM	2.500	2.06	3.62
20	1-1/2 - 11-1/2 NPSM	1.500	1.25	2.50
21	2 - 11-1/2 NPSM	2.000	1.25	3.00

NOTES:

1. THE RP2411 ADAPTER COUPLES MISCELLANEOUS FITTINGS TO RP2100, RP2110, OR RP2120 END FITTINGS.
2. SEE TEXT FOR MATERIAL, FINISH, MARKING, ETC.
3. THE AMERICAN NATIONAL THREAD SERIES (N) HAS BEEN SUPERSEDED BY THE UNIFIED THREAD SERIES (UN). THE SERIES N-THREAD SIZES LISTED IN TABLE II ARE RETAINED FOR USE WITH THOSE ITEMS WHICH HAVE SERIES N-THREADS.
4. DIMENSIONS ARE IN INCHES.

Figure 5-16. RP2411 Adapter for Miscellaneous Threaded Fittings

RP2420 Adapter for MIL-C-24231 Hull Fitting

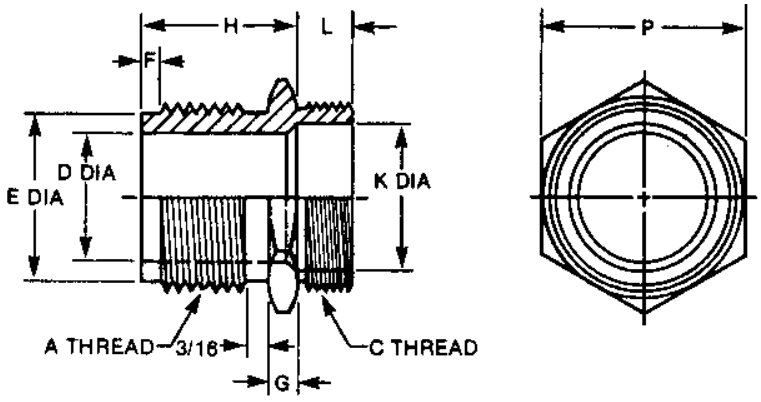

TABLE I

STANDARD CONDUIT		ADAPTER		
CONDUIT SIZE CODE	CONDUIT SIZE (Nom. ID)	C THREAD (Class 2A)	L ± .02	K DIA (Min.)
02	1/4	.4375 - 28 UNEF	.21	.25
03	3/8	.5625 - 24 UNEF	.25	.37
04	1/2	.6875 - 24 UNEF	.25	.50
05	5/8	.8125 - 20 UNEF	.31	.62
06	3/4	.9375 - 20 UNEF	.31	.75
08	1	1.250 - 18 UNEF	.37	1.00
10	1-1/4	1.5625 - 18 UNEF	.37	1.25
12	1-1/2	1.875 - 16 UN	.43	1.50
16	2	2.375 - 16 UN	.43	2.00
20	2-1/2	2.875 - 16 UN	.43	2.50
24	3	3.375 - 16 UN	.43	3.00

PART NUMBER DEVELOPMENT

Example: RP2420 - 05 - 12

Basic Part Number

A Thread Code (See Table II)

Conduit Size Code (See Table I)

TABLE II

ADAPTER								HULL FITTING ASSEMBLY MIL-C-24231/
A THREAD CODE	A THREAD (Class 2A)	D DIA ± .005	E DIA ± .02	F DIM ± .02	G DIM ± .02	H DIM ± .02	P DIM ± .02	
01	1.250 - 12 UNF	.875	1.13	.12	.18	1.06	1.37	5, 7
02	1.000 - 12 UNF	.515	—	.00	.18	.75	1.12	6, 8
03	1.250 - 12 UNF	.671	—	.00	.18	.87	1.37	9, 24
04	1.250 - 12 UNF	.796	—	.00	.18	.87	1.37	9
05	1.750 - 12 UN	1.312	1.63	.12	.18	1.06	1.87	10, 11
06	2.625 - 12 UN	2.062	—	.00	.25	1.81	2.81	19

NOTES:

1. THE RP2420 ADAPTER COUPLES MIL-S-24231 PRESSUREPROOF CONNECTORS (HULL FITTINGS) TO RP2100, RP2110, OR RP2120 END FITTINGS.
2. SEE TEXT FOR MATERIAL, FINISH, MARKING, ETC.
3. DIMENSIONS ARE IN INCHES.

Figure 5-17. RP2420 Adapter for MIL-C-24231 Hull Fitting

RP2430 Adapter for Pipe Thread (Tapered)

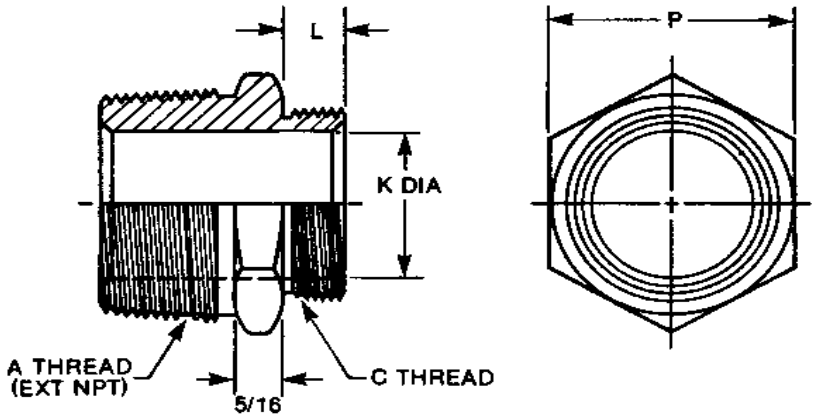

STANDARD CONDUIT		ADAPTER				
CONDUIT SIZE CODE	CONDUIT SIZE (Nom. ID)	A PIPE THD (Class 2A)	P (Min.)	C THREAD (Class 2A)	L ±.02	K DIA (Min.)
02	1/4	1/4 - 18 NPT	.69	.4375 - 28 UNEF	.21	.25
03	3/8	3/8 - 18 NPT	.81	.5625 - 24 UNEF	.25	.37
04	1/2	1/2 - 14 NPT	1.00	.6875 - 24 UNEF	.25	.50
05	5/8	3/4 - 14 NPT	1.18	.8125 - 20 UNEF	.31	.62
06	3/4	3/4 - 14 NPT	1.18	.9375 - 20 UNEF	.31	.75
08	1	1 - 11-1/2 NPT	1.50	1.250 - 18 UNEF	.37	1.00
10	1-1/4	1-1/4 - 11-1/2 NPT	1.81	1.5625 - 18 UNEF	.37	1.25
12	1-1/2	1-1/2 - 11-1/2 NPT	2.12	1.875 - 16 UN	.43	1.50
16	2	2 - 11-1/2 NPT	2.62	2.375 - 16 UN	.43	2.00
20	2-1/2	2-1/2 - 8 NPT	3.00	2.875 - 16 UN	.43	2.50
24	3	3 - 8 NPT	3.62	3.375 - 16 UN	.43	3.00

PART NUMBER DEVELOPMENT

Example: RP2430 - 06

Basic Part Number

Conduit Size Code
(See Table)

NOTES:

1. THE RP2430 ADAPTER COUPLES ANY FITTING HAVING A FEMALE TAPERED PIPE THREAD TO RP2100, RP2110, OR RP2120 END FITTINGS.
2. SEE TEXT FOR MATERIAL, FINISH, MARKING, ETC.
3. DIMENSIONS ARE IN INCHES.

Figure 5-18. RP2430 Adapter for Pipe Thread (Tapered)

RP2431 Adapter for Pipe Thread (Straight)

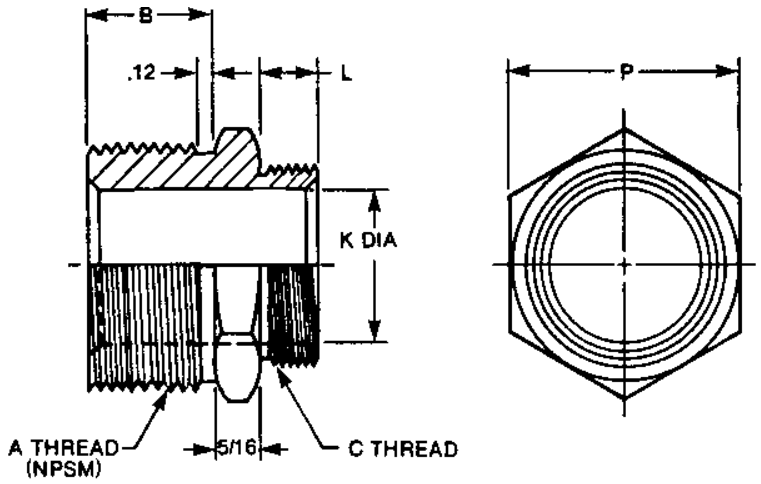

STANDARD CONDUIT		ADAPTER					
CONDUIT SIZE CODE	CONDUIT SIZE (Nom. ID)	A PIPE THD (Class 2A)	B DIM ± .02	P (Min.)	C THREAD (Class 2A)	L ± .02	K DIA (Min.)
02	1/4	1/4 - 18 NPSM	.75	.69	.4375 - 28 UNEF	.21	.25
03	3/8	3/8 - 18 NPSM	.75	.81	.5625 - 24 UNEF	.25	.37
04	1/2	1/2 - 14 NPSM	.87	1.00	.6875 - 24 UNEF	.25	.50
05	5/8	3/4 - 14 NPSM	.87	1.18	.8125 - 20 UNEF	.31	.62
06	3/4	3/4 - 14 NPSM	.87	1.18	.9375 - 20 UNEF	.31	.75
08	1	1 - 11-1/2 NPSM	.87	1.50	1.250 - 18 UNEF	.37	1.00
10	1-1/4	1-1/4 - 11-1/2 NPSM	.87	1.81	1.5625 - 18 UNEF	.37	1.25
12	1-1/2	1-1/2 - 11-1/2 NPSM	1.00	2.12	1.875 - 16 UN	.43	1.50
16	2	2 - 11-1/2 NPSM	1.19	2.62	2.375 - 16 UN	.43	2.00
20	2-1/2	2-1/2 - 8 NPSM	1.62	3.00	2.875 - 16 UN	.43	2.50
24	3	3 - 8 NPSM	1.69	3.62	3.375 - 16 UN	.43	3.00

PART NUMBER DEVELOPMENT

Example: RP2431 - 06

Basic Part Number

Conduit Size Code
(See Table)

NOTES:

1. THE RP2431 ADAPTER COUPLES ANY FITTING HAVING A FEMALE STRAIGHT PIPE THREAD TO RP2100, RP2110, OR RP2120 END FITTINGS.
2. SEE TEXT FOR MATERIAL, FINISH, MARKING, ETC.
3. DIMENSIONS ARE IN INCHES.

Figure 5-19. RP2431 Adapter for Pipe Thread (Straight)

RP2440 Adapter, Non-Metallic

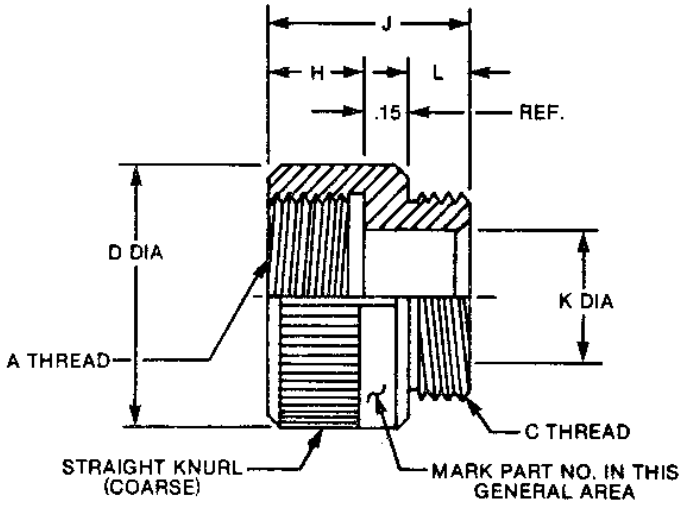

TABLE I

STANDARD CONDUIT		ADAPTER						
CONDUIT SIZE CODE	CONDUIT SIZE (Nom. ID)	D DIA ±.02	H +.02 −.00	A THREAD (Class 2B)	C THREAD (Class 2A)	L +.00 −.01	K +.00 −.01	J ±.03
02	1/4	.75	.24	.4375 - 28 UNEF	.4375 - 28 UNEF	.21	.25	.60
03	3/8	.88	.28	.5625 - 24 UNEF	.5625 - 24 UNEF	.25	.37	.68
04	1/2	1.00	.28	.6875 - 24 UNEF	.6875 - 24 UNEF	.25	.50	.68
05	5/8	1.12	.34	.8125 - 20 UNEF	.8125 - 20 UNEF	.31	.62	.80
06	3/4	1.25	.34	.9375 - 20 UNEF	.9375 - 20 UNEF	.31	.75	.80
08	1	1.56	.40	1.250 - 18 UNEF	1.250 - 18 UNEF	.37	1.00	.92
10	1-1/4	1.88	.40	1.5625 - 18 UNEF	1.5625 - 18 UNEF	.37	1.25	.92
12	1-1/2	2.19	.46	1.875 - 16 UN	1.875 - 16 UN	.43	1.50	1.04
16	2	2.69	.46	2.375 - 16 UN	2.375 - 16 UN	.43	2.00	1.04
20	2-1/2	3.19	.46	2.875 - 16 UN	2.875 - 16 UN	.43	2.50	1.04
24	3	3.69	.46	3.375 - 16 UN	3.375 - 16 UN	.43	3.00	1.04

TABLE II

MATERIAL CODE	MATERIAL	SPECIFICATION
N	NYLON, RIGID: RODS, TUBES, ETC.	L-P-410
	NYLON, MOLDING PLASTIC	MIL-M-20693, TYPE II
STN	SUPER TOUGH NYLON ZYTEL, ST801 (OR EQUIV.)	DUPONT SPEC. SHEETS OR EQUIVALENT SOURCE

PART NUMBER DEVELOPMENT

Example: RP2440 - 06 - N

Basic Part Number

Conduit Size Code (See Table I)

Material Code (See Table II)

Notes:

1. THE RP2440 ADAPTER COUPLES AN RP2000-SERIES METALLIC END-FITTING TO AN RP2000-SERIES METALLIC ADAPTER, AND PROVIDES ELECTRICAL ISOLATION BETWEEN THEM.
2. SEE TEXT FOR MATERIAL, FINISH, MARKING, ETC.
3. DIMENSIONS ARE IN INCHES.

Figure 5-20. RP2440 Adapter, Nonmetallic

RP2500 Adapter for Panel Termination

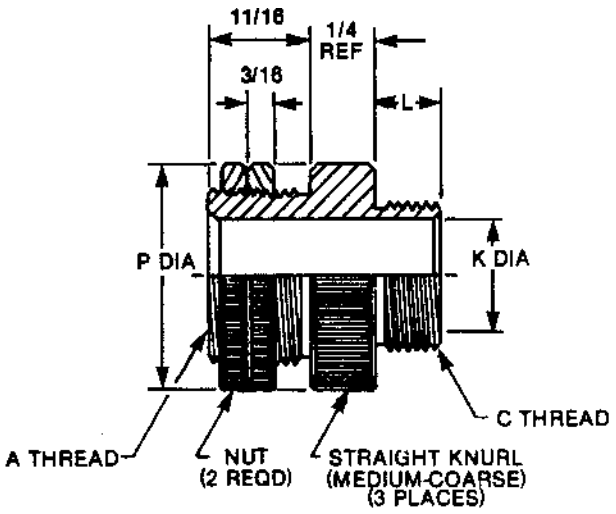

STANDARD CONDUIT		ADAPTER				
CONDUIT SIZE CODE	CONDUIT SIZE (Nom. ID)	A THREAD (Class 2A)	P DIA (Min.)	C THREAD (Class 2A)	L ±.02	K DIA (Min.)
02	1/4	.6250 - 24 UNEF	.87	.4375 - 20 UNEF	.21	.25
03	3/8	.750 - 20 UNEF	1.00	.5625 - 24 UNEF	.25	.37
04	1/2	.875 - 20 UNEF	1.12	.6875 - 24 UNEF	.25	.50
05	5/8	1.000 - 20 UNEF	1.25	.8125 - 20 UNEF	.31	.62
06	3/4	1.1875 - 18 UNEF	1.43	.9375 - 20 UNEF	.31	.75
08	1	1.4375 - 18 UNEF	1.68	1.250 - 18 UNEF	.37	1.00
10	1-1/4	1.750 - 16 UN	2.00	1.5625 - 18 UNEF	.37	1.25
12	1-1/2	2.000 - 16 UN	2.25	1.875 - 16 UN	.43	1.50
16	2	2.500 - 16 UN	3.00	2.375 - 16 UN	.43	2.00
20	2-1/2	3.000 - 16 UN	3.50	2.875 - 16 UN	.43	2.50
24	3	3.500 - 16 UN	4.00	3.375 - 16 UN	.43	3.00

PART NUMBER DEVELOPMENT

Example: RP2500 - 06

Basic Part Number

Conduit Size Code (See Table)

NOTES:

1. THE RP2500 ADAPTER PROVIDES THE CAPABILITY OF TERMINATING AN RP2100, RP2110, OR RP2120 ENDFITTING TO A PANEL.
2. SEE TEXT FOR MATERIAL, FINISH, MARKING, ETC.
3. DIMENSIONS ARE IN INCHES.

Figure 5-21. RP2500 Adapter for Panel Termination

RP2610 Adapter, 90°

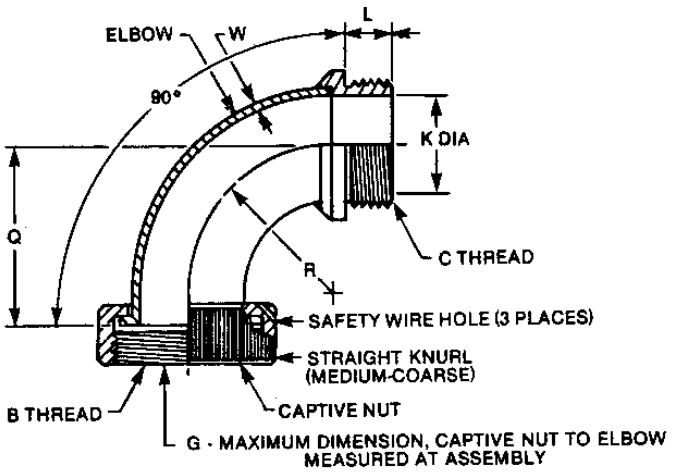

STANDARD CONDUIT		ADAPTER							
CONDUIT SIZE CODE	CONDUIT SIZE (Nom. ID)	B THREAD (Class 2B)	G +.01 −.02	Q ±.06	R BEND RADIUS ±.06	W MIN WALL THICKNESS	C THREAD (Class 2A)	L ±.02	K DIA (Min.)
02	1/4	.4375 - 28 UNEF	.14	.81	.43	.028	.4375 - 28 UNEF	.21	.25
03	3/8	.5625 - 24 UNEF	.17	.93	.56	.028	.5625 - 24 UNEF	.25	.37
04	1/2	.6875 - 24 UNEF	.17	1.12	.75	.028	.6875 - 24 UNEF	.25	.50
05	5/8	.8125 - 20 UNEF	.23	1.25	.87	.028	.8125 - 20 UNEF	.31	.62
06	3/4	.9375 - 20 UNEF	.23	1.47	1.06	.028	.9375 - 20 UNEF	.31	.75
08	1	1.250 - 18 UNEF	.29	1.81	1.37	.028	1.250 - 18 UNEF	.37	1.00
10	1-1/4	1.5625 - 18 UNEF	.29	2.12	1.68	.028	1.5625 - 18 UNEF	.37	1.25
12	1-1/2	1.875 - 16 UN	.35	2.50	2.06	.058	1.875 - 16 UN	.43	1.50
16	2	2.375 - 16 UN	.35	3.12	2.68	.058	2.375 - 16 UN	.43	2.00
20	2-1/2	2.875 - 16 UN	.35	3.75	3.31	.058	2.875 - 16 UN	.43	2.50
24	3	3.375 - 16 UN	.35	5.00	4.50	.058	3.375 - 16 UN	.43	3.00

PART NUMBER DEVELOPMENT

Example: RP2610 - 06

Basic Part Number

Conduit Size Code (See Table)

NOTES:

1. THE RP2610 ADAPTER CONVERTS A STRAIGHT RP2100 END FITTING INTO A 90° END FITTING. SEE RP2110.
2. SEE TEXT FOR MATERIAL, FINISH, MARKING, ETC.
3. DIMENSIONS ARE IN INCHES.

Figure 5-22. RP2610 Adapter, 90°

RP2620 Adapter, 45°

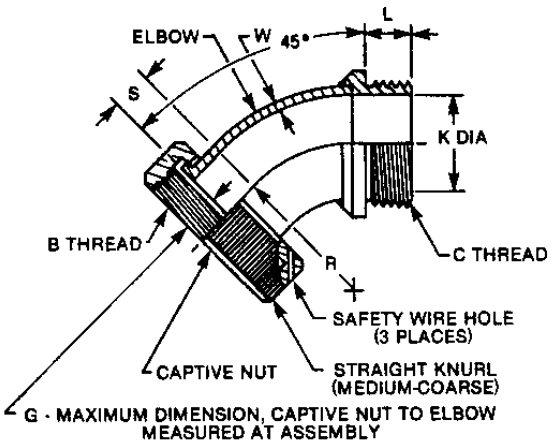

STANDARD CONDUIT		ADAPTER							
CONDUIT SIZE CODE	CONDUIT SIZE (Nom. ID)	B THREAD (Class 2B)	G +.01 −.02	R BEND RADIUS ±.06	S ±.06	W MIN WALL THICKNESS	C THREAD (Class 2A)	L ±.02	K DIA (Min.)
02	1/4	.4375 - 28 UNEF	.14	.43	.37	.028	.4375 - 28 UNEF	.21	.25
03	3/8	.5625 - 24 UNEF	.17	.56	.37	.028	.5625 - 24 UNEF	.25	.37
04	1/2	.6875 - 24 UNEF	.17	.75	.37	.028	.6875 - 24 UNEF	.25	.50
05	5/8	.8125 - 20 UNEF	.23	.87	.37	.028	.8125 - 20 UNEF	.31	.62
06	3/4	.9375 - 20 UNEF	.23	1.06	.37	.028	.9375 - 20 UNEF	.31	.75
08	1	1.250 - 18 UNEF	.29	1.37	.43	.028	1.250 - 18 UNEF	.37	1.00
10	1-1/4	1.5625 - 18 UNEF	.29	1.68	.43	.028	1.5625 - 18 UNEF	.37	1.25
12	1-1/2	1.875 - 16 UN	.35	2.06	.43	.058	1.875 - 16 UN	.43	1.50
16	2	2.375 - 16 UN	.35	2.68	.43	.058	2.375 - 16 UN	.43	2.00
20	2-1/2	2.875 - 16 UN	.35	3.31	.43	.058	2.875 - 16 UN	.43	2.50
24	3	3.375 - 16 UN	.35	4.50	.50	.058	3.375 - 16 UN	.43	3.00

PART NUMBER DEVELOPMENT

Example: RP2620 - 06

Basic Part Number

Conduit Size Code (See Table)

NOTES:

1. THE RP2620 ADAPTER CONVERTS A STRAIGHT RP2100 END FITTING INTO A 45° END FITTING. SEE RP2120.
2. SEE TEXT FOR MATERIAL, FINISH, MARKING, ETC.
3. DIMENSIONS ARE IN INCHES.

Figure 5-23. RP2620 Adapter, 45°

SECTION 6

CABLE AND SPACING REQUIREMENTS

Section 6

CABLE SPACING AND SHIELDING REQUIREMENTS

TABLE OF CONTENTS

Paragraph		Page
	LIST OF ILLUSTRATIONS	6-ii
	LIST OF TABLES	6-ii
6.1	INTRODUCTION	6-1
6.2	SCOPE	6-1
6.2.1	Cable Types	6-1
6.2.2	Special Case Situations	6-1
6.3	DEFINITIONS	6-2
6.4	CABLE CATEGORIZATION	6-3
6.4.1	Table of Cable Categories and Designators	6-3
6.4.2	Selection of Cable Designators	6-3
6.5	PARAMETERS AND CONSIDERATIONS FOR CABLE SPACING REQUIREMENTS	6-3
6.5.1	Effective Loop-Area Parameter	6-3
6.5.2	Self-Compatibility of Cable	6-3
6.5.3	Self-Compatibility of Equipment	6-6
6.5.4	Differential-Mode Versus Common-Mode Interference Considerations	6-6
6.5.5	Structure Currents and Armored Power Cable Considerations	6-6
6.6	CABLE-TO-CABLE SPACING REQUIREMENTS	6-8
6.6.1	Cable-to-Cable Spacing Chart	6-8
6.6.2	Spacing of Multiconductor Cables	6-8
6.6.3	Spacing of Dual-Function Cables	6-8
6.6.4	Spacing of Cables in Muted Systems	6-8
6.6.5	Spacing of Single Conductor Cables	6-8
6.6.6	Spacing of Susceptible Cables with Large Effective Loop Areas	6-8
6.6.7	Spacing of Portable Equipment Cables	6-8
6.6.8	Spacing of Microwave Transmission Lines and Waveguides	6-9
6.6.9	Installation Practice Regarding Excess Cabling	6-9
6.7	CABLE SHIELDING REQUIREMENTS	6-9
6.7.1	Partial Shielding	6-9
6.7.2	Magnetic Saturation of Shielding Conduit	6-10
6.7.3	Flexible Metal Conduit	6-10
6.7.4	Rigid Metal Conduit	6-11
6.7.5	Conduit Grounding/Insulation Requirements	6-11
6.7.5.1	Single-Point Grounding	6-11
6.8	PROCEDURES FOR CALCULATING CABLE-TO-CABLE SPACING AND SHIELDING	6-12
6.8.1	Procedure 1 - Determining Cable-to-Cable Spacing and Shielding for Radiators Versus Susceptors in Susceptor Categories S1, S2, and S4	6-13

TABLE OF CONTENTS (Continued)

Paragraph		Page
6.8.1.1	Examples for Procedure 1	6-15
6.8.2	Procedure 2 - Determining Cable-to-Cable Spacing and Shielding for Radiators Versus Susceptors in Susceptor Categories S3 and R4 Through R8	6-18
6.8.2.1	Example for Procedure 2	6-19
6.9	SPACING AND SHIELDING REQUIREMENTS FOR SUSCEPTIBLE CABLES TO OTHER INTERFERENCE SOURCES	6-20
6.9.1	Susceptor Categories S1 Through S4	6-20
6.9.2	Susceptor Categories R4 Through R8	6-20
6.10	GUIDELINES FOR EMC CABLEWAY DESIGN	6-20
6.10.1	Guidelines for Susceptor Cableway Design	6-20
6.10.2	Guidelines for Radiator Cableway Design	6-21
6.10.3	Guidelines for Radiator/Susceptor and Less-Sensitive Susceptor Cable Cableway Design	6-21
6.11	CABLE MARKING	6-22

LIST OF ILLUSTRATIONS

Figure		Page
6-1	Cables in Categories R1 and R2	6-25
6-2	Cables in Categories R3 Through R8	6-28
6-3	Cables in Category R9	6-30
6-4	Cables in Categories S1 Through S4	6-33
6-5	Categories S1, S2, and S4, Group Numbers and Associated Group Voltages	6-35
6-6	Spacing Chart for Radiator and Susceptor Cables	6-36
6-7	Shielding Effectiveness of Conduit Versus Frequency	6-37
6-8	Spacing and Shielding Chart for Susceptible Cables (Categories S1 Through S4) to Interference Sources	6-38
6-9	Measurement of Cable Spacing Distances	6-39
6-10	Partial Shielding Installation	6-39

LIST OF TABLES

Table		Page
6-1	Cable Categories and Designators	6-4

Section 6

CABLE SPACING AND SHIELDING REQUIREMENTS

6.1 INTRODUCTION

Electromagnetic Compatibility (EMC) between electrical/electronic equipment and systems is achieved in part by close adherence to proven installation methods and procedures. This section provides such a procedure. It can be employed to establish the necessary cable grouping, routing, spacing, and shielding requirements to ensure EMC in naval installations. The procedure is based on the following parameters.

a. Radiation characteristics of cables and other interference sources.

b. Susceptibility characteristics of cables in terms of "effective loop area."

c. Sensitivity and operating frequency of equipment connected to the susceptible cables.

d. Shielding effectiveness of shielding conduit.

6.2 SCOPE

This section describes the requirements for cable spacing between susceptible cables and cables that radiate electromagnetic energy, and between susceptible cables and other interference sources. The use of shielding conduit is specified only when the spacing requirements cannot be met. Cable spacing and shielding requirements contained in this section are valid for any shipboard use where the cable types designated herein are employed. Although the scope of this document is limited to below-decks shipboard environments, these cable-to-cable spacing requirements apply to both inboard and outboard installations including the sea water medium.

6.2.1 Cable Types

The nomenclature for cable types employed in this section is in accordance with the following military specifications: MIL-C-915 (General Shipboard Cable), MIL-C-17 (Coaxial, Twin, and Triaxial Cables), MIL-C-24640 (Lightweight Cable), and MIL-C-24643 (Low-Smoke version of MIL-C-915). Cable applications not listed in these four specifications, such as a signal cable used for low-level power transmission, shall be handled on a "special case" basis. Also, when unlisted cables must be employed, a "special case" analysis is required. (See paragraph 6.2.2.)

6.2.2 Special Case Situations

Any EMI problem or situation whose resolution is beyond the scope of instruction provided in this handbook is considered a "special case." Any recommended solutions to special case problems (supported by sufficient rationale) should be submitted to: Commander, Naval Sea Systems Command, Code 05K2B Arlington, VA 22242, telephone (703) 602-2549 or other NAVSEA-designated authority for approval.

6.3 DEFINITIONS

NOTE: Figures 6-1 through 6-10, which are referenced throughout this section, are grouped at the end of this section.

a. Susceptor - A cable that is susceptible to magnetic field radiation.

b. Radiator - A cable that produces magnetic field radiation.

c. Cable Designator - The cable designation as determined by this section. It consists of a cable category or a cable category and group number.

d. Cable Category - Prefixes "R" and "S" are used to designate the various cable categories in this section. Categories R1, R2, R3, and R9 are considered to be radiators only. Categories R4 through R8 are considered to be radiators but may also be susceptors. Categories S1 through S4 are considered to be susceptors only.

e. Group Number - In the "R" categories, the number following the category after a dash identifying a family of cables having similar electrical characteristics. In the "S" categories, the number following the category with a dash representing the group voltage V_2 (dBV) which is determined by the equipment design performance sensitivity V_1 (dBV) (see figure 6-5).

f. V_1 (dBV) - Equipment design performance sensitivity. This sensitivity will normally be supplied by the equipment manufacturer, or it can be obtained from Government or contractor furnished information. V_1 (dBV) is defined as the lowest input signal voltage which will produce a zero dB signal-to-noise ratio within the operating bandwidth of the equipment.

g. Passband - The frequency band used when determining V_1 (dBV), the equipment design performance sensitivity.

h. Spacing Restriction - The cable-to-cable spacing available (in inches) due to physical restrictions, if any, of the installation.

i. V_2 (dBV) - The group voltage in figure 6-5 that is determined by V_1 (dBV), the equipment design performance sensitivity.

j. S (dB) - Shielding effectiveness provided by shielding conduit and given as a function of frequency in figure 6-7.

k. V_3 (dBV) = V_1 (dBV) + S (dB) - A voltage directly related to the sum of the equipment design performance sensitivity and the shielding effectiveness of the conduit, in decibels.

l. Special Case - Any EMI problem, condition, or other situation whose resolution is beyond the scope of instruction provided in this handbook is considered a "special case." Recommended solutions to special case problems, along with the supporting rationale, should be submitted to NAVSEA (see paragraph 6.2.2) or other NAVSEA-designated authority for approval.

6.4 CABLE CATEGORIZATION

6.4.1 Table of Cable Categories and Designators

The cable categories, category descriptions, group numbers, and cable designators are listed in table 6-1. Note that the cable designator consists of a cable category and, in most cases, a group number.

6.4.2 Selection of Cable Designators

The selection of cable designators should reflect actual cable characteristics and operating parameters. The cable category descriptions given in table 6-1 do not completely describe all possible functions, therefore, a reasonable amount of analysis and judgement is required in selecting the proper designator. As an example, a cable used in a dc control circuit employed to switch a logic gate should be categorized as an R-8 (cables used to carry digital data), and not an R9-1 (cables that carry dc). Using the R-8 category cables, the gate switching function is protected against electric field interference by an overall cable braid. This would not be the case were it categorized R9-1 and an unshielded power cable used as the transmission line.

The selection of a cable designator that provides greater than necessary protection is unwarranted because it places prohibitive spatial restrictions on adjacent cables.

6.5 PARAMETERS AND CONSIDERATIONS FOR CABLE SPACING REQUIREMENTS

6.5.1 Effective Loop-Area Parameter

The susceptibility of a cable to magnetic fields if proportional to its effective loop area (see paragraph 6.1b) which can be determined from the geometric and electrical properties of the cable. The equation used to determine effective loop area (A) is presented here for reference.

$$A = \frac{e_{ind}}{0.406fB} \text{ square inches},$$

where:
- e_{ind} = induced voltage in microvolts
- f = frequency in hertz
- B = flux density in gauss.

The data for determining effective loop area is obtained by measuring the voltage induced (e_{ind}) in a fixed length of cable placed in the calibrated field (B) of a Helmholtz coil energized at a frequency (f). The resulting information is used to assign cable categories to the individual cables. Tabular data that lists cables and their assigned categories and group numbers are provided in figures 6-1 through 6-5.

6.5.2 Self-Compatibility of Cable

It is assumed throughout this section that functions within multiconductor cables will be compatible. A multiconductor cable should not contain radiator and susceptor functions which must operate simultaneously if any spacing of those functions is required by Figure 6-6. If no spacing is required by Figure 6-6, and if the susceptor functions are contained in shield braid for protection from electric-field coupling, the functions should be compatible.

Table 6-1. Cable Categories and Designators

Cable Category	Category Description	Group Numbers	Cable Designators
R1	Shipboard cables that carry 60-Hz power above 0.5 amp. Cables in this category are listed in figure 6-1.	0 thru 7, and 9	R1-0 thru R1-7, R1-9
R2	Shipboard cables that carry 400-Hz power above 0.5 amp. See figure 6-1.	0 thru 7, and 9	R2-0 thru R2-7, R1-9
R3	All transmitting systems using the cables listed in figure 6-2.	1, 2, 3	R3-1, R3-2, R3-3
R4	Transmitting systems and triggering circuits operating above 100 kHz and using RG-type coaxial cables. See figure 6-2.	(none)	R4
R5	Cables used to carry audio signals whose maximum values exceed 0.1 volt. Typical components are announcing circuits, ac recorders, loadspeakers, call bells, and alarm bells. See figure 6-2.	(none)	R5
R6	Cables that carry 60-Hz synchro signals, 60-Hz indicator signals, 60-Hz control signals at 0.5 amp or less, or 60-Hz power at 0.5 amp or less. See figure 6-2. NOTE: Any 60-Hz control signal over 0.5 amp must be classified in the R1 category. See figure 6-1.	1, 2	R6-1, R6-2
R7	Cables that carry 400-Hz synchro signals, 400-Hz indicator signals, 400-Hz control signals at 0.5 amp or less, or 400-Hz power at 0.5 amp or less. See figure 6-2. NOTE: Any 400-Hz control signal over 0.5 amp must be classified in the R2 category. See figure 6-1.	1, 2	R7-1, R7-2
R8	Cables used to carry digital data. See figure 6-2.	(none)	R8
R9	Cables that carry dc. See figure 6-3.	1, 2, 3	R9-1, R9-2, R9-3

Table 6-1. Cable Categories and Designators (Continued)

Cable Category	Category Description	Group Numbers	Cable Designators
S1, S2	Receiving systems operating in the frequency band 10 kHz to 100 kHz and using cables listed in figure 6-4. See note 1. The group numbers 1 thru 8 are related to system sensitivity. See notes 2, 3 and 4.	1 thru 8	S1-1 thru S1-8, S2-1 thru S2-8
S3	Receiving and video systems operating above 100 kHz and using the cables listed in figure 6-4. See note 4.	(none)	S3
S4	Receiving systems operating below 10 kHz and using cables listed in figure 6-4. The category also includes low level sensor signals and varying dc, for example, strain gages, resistive temperature devices (RTDs) and accelerometers and microphones. The group numbers 1 thru 8 are related to system sensitivity. See notes 2, 3 and 4.	1 thru 8	S4-1 thru S4-8

NOTES ON "S" CATEGORIES

1. The difference between cable categories S1 and S2 lies in the type of cable used. For example, in figure 6-4 the S1 category is assigned to MIL-C-17 RG-type coaxial cables only, whereas the S2 category is assigned to the MIL-C-915 and MIL-C-24640 cable types listed.

2. The group number for cable category S1, S2 or S4 is determined by the equipment design performance sensitivity, V_1(dbV). For example: a certain equipment has a V_1 of -105 dbV; this value falls within the range of values of -120 to -100 dbV listed under "Group Voltage V_2(dbV)" in column 3 of figure 6-5. The group number associated with this group voltage is "4" (see column 2 of figure 6-5).

3. The sensitivity referred to in categories S1, S2, and S4 means that the voltage induced in the susceptible cable is equal to the design performance sensitivity of the equipment connected to the cable.

4. The design performance sensitivity V_1 of the S1, S2, S3 and S4 cable categories is less than or equal to 0.1 volts. Sensitivity levels above 0.1 volts must be assigned a radiator category.

6.5.3 Self-Compatibility of Equipment

It is assumed that equipment supplied to the installing activity by the manufacturer will be self-compatible. In cases where cable-connector mounting on individual cabinets or equipment violates the spacing requirements described in this section, the manufacturer's spacing will take precedence.

It must also be assumed that, although spacing between cable penetrations on Government Furnished Equipment (GFE) cabinets may be less than that prescribed in this section, the system in question passed all the tests required of GFE and was accepted for service use. Therefore, the cable spacing was adequate for the conditions under which the equipment was tested. It is possible that acceptance tests were conducted in a sterile electromagnetic environment such as a screen-room area supplied with filtered power. It is also possible that the spacing may be inadequate when the equipment is operated in the more stringent shipboard environment. For this reason, spacing of external cables connected to such a cabinet or equipment shall be routed to meet the spacing requirements of this section within as short a distance from the cabinet or equipment as practicable.

6.5.4 Difference-Mode Versus Common-Mode Interference Considerations

Common-mode interference (CMI) voltages are those voltages appearing in equal magnitude and phase from each signal conductor to ground. They are developed as follows:

a. Electrostatic coupling - The electrostatic environment is capacitively coupled to both signal wires.

b. Electromagnetic induction - The environmental magnetic field threads both signal line areas.

Electrical noise can be capacitively coupled from adjacent cables and cause CMI in ship installations which utilize long lengths of unshielded cable. CMI can be eliminated in most cases with the use of shielded cables (i.e., shielded twisted pairs as opposed to unshielded twisted pairs).

To minimize the effects of CMI, differential signal circuits and properly terminated shielded cable should be employed in the design of susceptible equipment. As this document assumes the common-mode case has been properly addressed, the spacing requirements contained herein are based only on the effects of differential-mode interference.

6.5.5 Structure Currents and Powerline Isolation Transformers

For purposes of this document, structure currents are defined as power-line currents flowing line-to-line via the ship's hull and structure. The connections from line-to-ground are completed through line-to-ground filter capacitors installed on powerline inputs to electrical and electronic equipment.

The latest issues of MIL-E-16400H(NAVY), MIL-STD-1399(NAVY) Section 300(A), and MIL-STD-461(C) specify limits for leakage current and the size of line-to-ground filter capacitors. These limits and other requirements are stated as follows:

a. The leakage current (vector sum of all phases) of the equipment, when EMI filtering is not required, shall not exceed 5 milliamperes (mA).

b. Where EMI filtering (powerline filters) is required in the user equipment, a line-to-line configuration is preferred. If a line-to-ground configuration is used for filtering, then the value of the filter capacitance shall not exceed 0.1 microfarad per phase for 60 Hz equipment and 0.02 microfarad per phase for 400 Hz equipment. If performance or operational needs of a user equipment require an electrical ground either solidly or by means of capacitors which exceed the values stated above, then that equipment shall be electrically isolated from the power system. Isolation transformers shall be installed on equipment with EMI filtering whose leakage current is in excess of 30 milliamperes. When necessary, the isolation transformer shall be part of the equipment configuration.

User equipment considerations are listed below.

a. Equipment purchased by the shipyards for shipboard installation, non-Government Furnished Equipment (non-GFE), should employ line-to-line filters or internal isolation transformers as required by the latest issues of MIL-E-16400(NAVY), MIL-STD-1399 (NAVY) Section 300, and MIL-STD-461.

b. For equipment provided to the shipbuilder by the Government, Government Furnished Equipment (GFE), the shipyards must install in accordance with Installation Control Drawings (ICDs).

c. If EMI problems are identified during system testing, the installer should become aware of the problem caused by structure currents and the potential need for low-capacitance-to-ground filters or powerline isolation transformers. As TDA to the NAVSEA SEMCIP IEMC Element, NUSC/NLL Code 3431 is authorized to work with the shipyard in formulating a specific recommendation.

d. To further minimize EMI problems of this nature, the armor on power cables should not be connected to cabinets containing cables assigned an "S" category in accordance with this section.

6.6 CABLE-TO-CABLE SPACING REQUIREMENTS

6.6.1 Cable-to-Cable Spacing Chart

The cable-to-cable spacing chart shown in figure 6-6 is a set of coordinates used to determine the required spacing between the various cables. The coordinates consist of radiator and susceptor designators previously defined in table 6-1. Spacing requirements shown on the chart are given in inches and are measured between the closest points of the outer sheaths of the cables or between the closest points of the outer surfaces of the shielding conduit enclosing the individual cables (see figure 6-9).

6.6.2 Spacing of Multiconductor Cables

When multiconductor cables carry signals falling in more than one radiator category or more than one susceptor category, the category with the greatest spacing requirement must be used to determine the spacing.

6.6.3 Spacing of Dual-Function Cables

Spacing assigned to a dual-function cable (radiator and susceptor) must be determined by both cable category designators assigned to the cable. The dual-function cable is considered to be compatible within itself by reason of operating one function at a time (for example: transmit or receive).

6.6.4 Spacing of Cables in Muted Systems

Radiators and susceptors may be run together if the systems connected to the susceptors are muted (muted here refers to disabling the receiving system during the time that the radiators are radiating).

6.6.5 Spacing of Single Conductor Cables

Cable designators are not assigned to single conductor cables in this section. Spacing requirements for installations employing single conductor cables for supply and return circuits must be considered on a special case basis and approved by NAVSEA (see paragraph 6.2.2) or other NAVSEA-designated authority. The following are examples of single conductor cable types: TRF, TRXF, SSGU, SHOF, SRW, and B16.

6.6.6 Spacing of Susceptible Cables with Large Effective Loop Areas

The voltage induced in a susceptible cable is directly proportional to the effective loop area of that cable. Cable types containing effective loop areas large enough (greater than 0.65 square inch) to generate impractical spacing requirements are not considered for susceptor application in this section. When cables of this type are employed for susceptor application, the spacing requirements must be determined on a special case basis and approved by NAVSEA (see paragraph 6.2.2) or other NAVSEA-designated authority. Examples of such cable types are: 2SJ7 through 2SJ12, MCOS, and MMOP.

6.6.7 Spacing of Portable Equipment Cables

These cables are not assigned a category because of the indeterminate spacing requirements of portable cable.

6.6.8 Spacing of Microwave Transmission Lines and Waveguides

Energy transmitted in the microwave region is normally restricted to the interior for the waveguide or solid wall transmission line. For this reason, waveguides and solid wall transmission lines are exempt from the spacing requirements of this document.

6.6.9 Installation Practice Regarding Excess Cabling

In addition to the requirements for cable-to-cable spacing, cable installation practices for EMC require that excess cabling be removed, except where necessary, rather than coiled. The coiling of cables can compromise cable-to-cable spacing and can result in an increase in common-mode interference voltage.

6.7 CABLE SHIELDING REQUIREMENTS

When the cable-to-cable spacing requirements of figure 6-6 cannot be met, electromagnetic shielding of cables must be applied using flexible or rigid metal conduit as specified in paragraphs 6.7.3, 6.7.4, and the procedures given in paragraph 6.8. The application of shielding to susceptors S3 and R4 through R8, when spacing requirements cannot be achieved, is to provide 20 dB of shielding as a minimum requirement. When this minimum requirement is satisfied, zero inches of spacing is permitted in all cases. Figure 6-7 gives values of shielding effectiveness, based on empirical measurements, for the rigid and high-permeability, flexible metal conduits. Shield conduit requirements are primarily dependent upon:

a. Spacing restrictions,

b. Frequency band of interest,

c. Type of shielding material selected, and

d. Signal level in the susceptible cable.

Wide variations in these parameters dictate the requirement that shielding be determined for each individual case. In all cases where either flexible or rigid metal conduit can provide the required shielding, flexible metal conduit shall be used.

6.7.1 Partial Shielding

Flexible or rigid shielding conduit may be used to enclose a portion of a cable run as an alternative to enclosing the entire cable run. For example, where a sonar cable runs through several compartments, and where shielding conduit is required in only one of those compartments, then partial shielding is recommended. However, a sufficient length of shielding conduit must be used to ensure the EMC of the cable. The use of partial shielding is subject to the following restrictions. (See figure 6-10.)

a. The conduit used as a partial shield shall not be less than 4 feet in length.

b. The shielding conduit shall extend a minimum of 12 inches beyond the points where required spacing is achieved. This 12-inch extension requirement applies to both ends of the shielding conduit except where terminated at an equipment cabinet, bulkhead, or other enclosure. Such terminations shall employ appropriate transition fittings (see sections 4 and 5).

c. The shielding conduit shall be terminated at a point along the cable run located near a surface which is suitable for providing mechanical support for the conduit end and strain relief for the cable. The resulting length of the exposed (unshielded) cable between the conduit end and the equipment cabinet, bulkhead, or other enclosure may vary with each installation.

d. Shielding conduit shall be provided mechanical support by being firmly secured using standard installation methods approved by NAVSEA or other NAVSEA-designated authority.

e. Shielding conduit shall be bonded to ground potential in accordance with the applicable issue of MIL-STD-1310, Standard Practice for Shipboard, Bonding, Grounding, and Other Techniques for Electromagnetic Compatibility and Safety.

f. The ends of shielding conduit not terminated with a standard transition fitting will be treated in the following manner.

(1) Flexible shielding conduit shall be brazed, soldered, or otherwise treated to ensure a braid-to-core union and the rough edges removed. Protective bushings will be installed to physically insulate the shielded cable from the conduit to prevent cutting or chafing at the conduit end.

(2) Rigid metal conduit ends shall have the rough edges removed and protective bushings installed to physically insulate the shielded cable from the conduit.

6.7.2 Magnetic Saturation of Shielding Conduit

Flexible metal conduit enclosing radiators that carry their rated current can saturate flexible metal conduit to varying degrees causing a partial loss in shielding effectiveness. It is important to note that when attempting to provide an EMI free installation that the first method is to provide adequate spacing between radiators and susceptors. If adequate spacing can not be provided, the second method is to shield the susceptor. If neither of these methods are sufficient the final method is to shield the radiator. Attempts to shield type R1 and R2 cables with flexible metal conduit must be considered on a special case basis and approved by NAVSEA (see paragraph 6.2.2). This restriction does not apply to rigid metal conduit because the magnetic saturation effects are considered negligible.

6.7.3 Flexible Metal Conduit

High-permeability, flexible metal conduit and associated hardware, specifications, assembly, and installation instructions shall be as described in sections 3, 4, and 5 and appendix D of this handbook.

6.7.4 Rigid Metal Conduit

Rigid metal conduit and associated coupling hardware shall be as described in section 2 of this handbook.

6.7.5 Conduit Grounding/Insulation Requirements

Conduit grounding requirements shall be in accordance with MIL-STD-1310 or as otherwise specified by NAVSEA (see paragraph 6.2.2 for special case situations).

Grounding requirement details for rigid conduit are in paragraph 2.4.2. Grounding requirement details for flexible conduit are in paragraph 3.4.5.

6.7.5.1 Single-Point Grounding

a. The determination of the best grounding configuration of magnetic shielding conduit (both rigid and flexible) for frequencies between 10 kHz and 100 kHz normally requires a case-by-case engineering analysis by NUSC/NLL, for example, as authorized by NAVSEA. With the absence of this analysis, it is recommended the installation drawings be followed. If there is no direction on the drawings concerning the grounding configuration, the following recommendation will provide the highest probability of attaining EMC:

   - For cable categories S1-1, S1-2, S1-3, S2-1, S2-2, S2-3, S4-1, S4-2 and S4-3, use a single-point ground configuration. These are the most sensitive cable categories and would be susceptible if there were sufficient currents flowing on the conduit.

   - For cable categories other than S1-1, S1-2, S1-3, S2-1, S2-2, S2-3, S4-1, S4-2 and S4-3, use a multiple-point ground configuration. These cable categories are less susceptible to the current amplitudes which, experience has revealed, exist on the conduit. For these cable categories, it is not technically cost-effective to implement the single-point ground in an all-inclusive manner.

b. To implement the single-point ground philosophy the ground should be located as indicated in the installation control drawing or by the other sources noted. If no specific direction is available, the conduit and associated cable shield shall be electrically insulated from ground (equipment connection) at the susceptible receiving equipment end and grounded at the signal source end.

c. Flexible conduit must be type 2 (rubber jacketed). Any breaches in the jacket, such as in-line splices or connectors, shall be covered with insulating tape or shrink sleeving to prevent incidental contact with any ground point.

d. See figure 5-20 for the RP 2440 non-metallic adapter for electrically isolating conduit.

e. The armor or conduit on power cables shall not be connected to cabinets containing circuits whose operation requires cables assigned an "S" category in accordance with this section.

6.8 PROCEDURES FOR CALCULATING CABLE-TO-CABLE SPACING AND SHIELDING

The basic approach for achieving proper cable spacing and shielding is presented in the following steps.

a. Determine the amount of cable-to-cable spacing (physical separation) required between radiator cables and susceptor cables to eliminate coupling.

b. If adequate spacing between cables is not practical on shipboard, install the susceptor cables in flexible shielding conduit. With this shielding, reduced spacing is required between the conduit containing the susceptor cables and the radiator cable or equipment. Note that shielding of susceptor cables verses the radiator cable is preferred because:

- There are fewer susceptor cables.
- Once shielded, they are protected from relocations or subsequent installations of nearby radiators.
- Susceptor cables may be run together in the same conduit, resulting in a potential cost reduction.
- Installing the maximum shielding required on susceptor cables reduces the need to shield both susceptor and radiator cables.
- Shielding radiator cables in flexible conduit may cause conduit saturation with subsequent loss of shielding effectiveness.

c. Where the combination of cable-to-shielded "S" cable spacing is inadequate, keep the "S" cable enclosed in flexible shielding conduit and enclose the "R" cable in flexible or rigid shielding conduit. NOTE: Radiator cables having certain "R" designators require shielding in rigid shielding conduit. (See paragraph 6.7.2.).

d. The following documents may provide assistance in determining the cable spacing and shielding requirements. They may be obtained by requesting a copy from the EMC Branch, Code 3431 of the Naval Underwater Systems Center, Division Newport, Newport, RI 02841-1708, telephone (401)832-5540 or autovon (920)5540.

(1) NUSC Technical Memorandum 871161, Dated 2 September 1988, classified CONFIDENTIAL, provides a listing of equipment design-performance sensitivity required for the categorization of input signal cables for various government furnished equipments.

(2) NUSC Technical Memorandum 811123 of 15 December 1981 provides a computer program for the HP 85 computer to assist in calculations for cabling and shielding requirements.

This approach is described in detail in the procedures listed below.

The following two procedures, when properly applied, give the spacing required for cables without shielding and, if necessary, the shielding conduit required for adequate protection of susceptible cables. Procedure 1 (paragraph 6.8.1) covers susceptor categories S1, S2, and S4. Procedure 2 (paragraph 6.8.2) covers susceptor categories S3 and R4 through R8.

Spacing and shielding calculations are made by following the steps listed in procedures 1 and 2, paragraphs 6.8.1 and 6.8.2 respectively. The right-hand column lists sources of information, within this section, that pertain to each step. Additional instructions are also given in the right-hand column to assist in making the calculations.

6.8.1 Procedure 1 - Determining Cable-to-Cable Spacing and Shielding for Radiators Versus Susceptors in Susceptor Categories S1, S2, and S4

STEP NO.	DETERMINE THE FOLLOWING VALUES	INFORMATION SOURCE OF INSTRUCTION
1	Radiator category	Table 6-1.
	Radiator group number	Figures 6-1, 6-2, or 6-3.
2	Susceptor category	Table 6-1.
	(If cable type is in susceptor category)	Figures 6-4.
	Susceptor group number	Table 6-5. (See note 3.)
3	Spacing requirement without shielding	Figure 6-6. Intersection of coordinates determined in steps 1 and 2.
4	Spacing restriction (Available spacing is adequate or inadequate)	If step 4 is equal to or greater than required spacing in step 3, available spacing is adequate; no shielding is required. If step 4 is less than required spacing in step 3, available spacing is inadequate; shielding of susceptor is required.
5	Conduit shielding effectiveness S(db)	Figure 6-7. Use lowest frequency in passband of equipment connected to susceptor.
6	V_3(dBV)	V_3(dBV) = V_1(dBV) + S(dB). (See para 6.3k)
7	New susceptor group number for cable with shielding	Figure 6-5. (See note 4.)
8	Spacing requirement with one cable shielded	Figure 6-6. Intersection of coordinates determined in steps 1 and 7.
9	Adequate shielding or inadequate shielding	If required spacing in step 8 is less than or equal to available spacing in step 4, adequate shielding has been provided. If required spacing in step 8 is greater that available spacing in step 4, shielding or both cables is required.
10	Spacing with susceptor and radiator shielded	Determine by repeating steps 5 through 9.

6.8.1 Procedure 1 - Determining Cable-to-Cable Spacing and Shielding for Radiators Versus Susceptors in Susceptor Categories S1, S2, and S4 (Continued)

STEP NO.	DETERMINE THE FOLLOWING VALUES	INFORMATION SOURCE OF INSTRUCTION
Repeated step 5	S(dB) = S(dB) susceptor + S(dB) radiator	S(dB) susceptor from first step 5. S(dB) radiator from figure 6-7. (See paragraph 6.7.2.)
Repeated step 6	V_3(dBV)	V_3(dBV) - V_1(dBV) + S(dB) from repeated-step 5.
Repeated step 7	New susceptor group number (both cables shielded)	Figure 6-5. (See note 4.)
Repeated step 8	Spacing requirement with both cables shielded	Figure 6-6. Intersection of coordinates determined in step 1 and repeated-step 7.
Repeated step 9	Adequate shielding or inadequate shielding	If required spacing in repeated-step 8 is less than or equal to available spacing in step 4, adequate shielding has been provided. If required spacing in repeated-step 8 is greater than available spacing in step 4, the following solutions apply: a. Remove physical restrictions to increase available spacing. b. Reroute radiator and/or susceptor.

6.8.1.1 Examples for Procedure 1

Example A

A 400-Hz power cable, type DSGU-75, is to be routed near a susceptible cable, type RG-264A/U. The susceptible cable will carry signals in the passband 10 kHz to 80 kHz. The RG-264A/U cable is connected to a radio receiver with a design performance sensitivity of -175 dBV. Because of the physical layout of equipment, there is a spacing restriction on these cables of 15 inches.

PROCEDURE 1 STEP NO.	RESULTS AND CALCULATIONS	NOTES
1	R2-4 (radiator)	Table 6-1 and figure 6-1 (sheet 1)
2	S1-1 (susceptor)	Table 6-1, figure 6-4 (sheet 1), and figure 6-5 (note 3). V_1(dBV) = -175.
3	18 inches (spacing w/o shielding)	Figure 6-6. Intersection of coordinates R2-4 and S1-1.
4	15 inches (available spacing)	Installation spacing restriction. Required spacing in step 3 is greater than available spacing in step 4; shielding of susceptor is required.
5	S(dB) = 47 dB	Figure 6-7. Flexible conduit at 10 kHz (passband is 10 kHz to 80 kHz).
6	V_3(dBV) = -175 + 47 = -128	V_3(dBV) = V_1(dBV) + S(dB)
7	3 (new group number)	Figure 6-5 (Note 4). Cable designation is S1-3.
8	10 inches (spacing with shielding)	Figure 6-6. Intersection of coordinates R2-4 and S1-3.
9	Adequate shielding	Shielding is adequate. Required spacing in step 8 is less than available spacing in step 4. The 10-inch spacing with shielding must be maintained as a minimum spacing requirement.

Example B

A 60-Hz power cable, type TSGU-100, is to be routed near an active/passive sonar cable, type DSS-3. The sonar operates passively in the passband 300 Hz to 10 kHz. The DSS-3 cable connects the transducers to the preamplifiers, and the preamplifiers have a design performance sensitivity of -173 dBV. Due to the physical layout of equipment there is a spacing restriction of 5 inches on these cables. This DSS-3 cable is a dual-function cable, but in this example only the receiving function will be considered.

PROCEDURE 1 STEP NO.	RESULTS AND CALCULATIONS	NOTES
1	R1-4 (radiator)	Table 6-1 and figure 6-1 (sheet 1)
2	S4-1 (susceptor)	Table 6-1, figure 6-4 (sheet 1), and figure 6-5 (note 3). V_1(dBV) = -173.
3	13 inches (spacing w/o shielding)	Figure 6-6. Intersection of coordinates R1-4 and S4-1.
4	5 inches (available spacing)	Installation spacing restriction. Required spacing in step 3 is greater than available spacing in step 4; shielding of susceptor is required.
5	S(dB) = 30 dB	Figure 6-7. Flexible conduit at 300 Hz (passband is 300 Hz to 10 kHz).
6	V_3(dBV) = -173 + 30 = -143	V_3(dBV) = V_1(dBV) + S(dB)
7	2 (new group number)	Figure 6-5 (Note 4). Cable designation is S4-2.
8	10 inches (spacing with shielding)	Figure 6-6. Intersection of coordinates R1-4 and S4-2.
9	5 inches (available spacing)	Required spacing in step 8 is less than available spacing in step 4. Radiator and susceptor require shielding.
10	Spacing with susceptor and radiator shielded	Determine by repeating steps 5 through 9.

Example B (Continued)

PROCEDURE 1 STEP NO.	RESULTS AND CALCULATIONS	NOTES
Repeated step 5	S(dB) = S(dB) susceptor + S(dB) radiator	S(dB) susceptor = 30 dB from first step 5. Rigid metal conduit used for shielding radiator (see paragraph 6.7.2).
	S(dB) = 30 + 35 = 65	S(dB) radiator = 35 dB from figure 6-7.
Repeated step 6	V_3(dBV) = -173 + 65 = -108	V_3(dBV) = V_1(dBV) + S(dB) of repeated-step 5.
Repeated step 7	4 (new group number)	Figure 6-5 (note 4). Cable designator is S4-4.
Repeated step 8	5 inches (spacing with both cables shielded)	Figure 6-6. Intersection of coordinates R1-4 and S4-4.
Repeated step 9	Adequate shielding	Required spacing in repeated-step 8 is equal to available spacing in step 4. The 5-inch spacing with shielding must be maintained as a minimum spacing requirement.

6.8.2 Procedure 2 - Determining Cable-to-Cable Spacing and Shielding for Radiators Versus Susceptors in Susceptor Categories S3 and R4 Through R8

STEP NO.	DETERMINE THE FOLLOWING VALUES	INFORMATION SOURCE OR INSTRUCTION
1	Radiator category	Table 6-1.
	Radiator group number	Figures 6-1, 6-2, or 6-3.
2	Susceptor category	Table 6-1.
	Susceptor group number	Figures 6-2, or 6-4
3	Spacing requirement without shielding	Figure 6-6. Intersection of coordinates determined in steps 1 and 2.
4	Spacing restriction (Available spacing is adequate or inadequate)	If step 4 is equal to or greater than required spacing in step 3, available spacing is adequate; no shielding is required. If step 4 is less than required spacing in step 3, available spacing is inadequate; 20 dB of shielding of susceptor is required. With 20 dB of shielding (minimum value), zero inches spacing is permissible. (See paragraph 6-7.)
5	20 dB conduit shielding effectiveness S(dB) (minimum value)	Figure 6-7. 20 dB (minimum value) at lowest frequency in passband of equipment connected to susceptible cable.

6.8.2.1 Example for Procedure 2

A 400-Hz power cable, type THOF-150, is routed with a radio receiver cable type RG-14A/U. The radio receiver cable will carry signals in the passband of 100 kHz to 30 MHz.

PROCEDURE 2 STEP NO.	RESULTS AND CALCULATIONS	NOTES
1	R2-5 (radiator	Table 6-1 and figure 6-1 (sheet 1)
2	S3 (susceptor)	Table 6-1 and figure 6-4 (sheet 1) Cable designator is S3.
3	2 inches (spacing w/o shielding)	Figure 6-6. Intersection of coordinates R2-5 and S3.
4	0 inches (available spacing)	Step 4 is less than required spacing in step 3, therefore shielding of susceptor is required.
5	S(dB) = 136 dB	Figure 6-7. An S(dB) of 136 dB with flexible conduit has been provided at 100 kHz. This exceeds the 20 dB minimum value. Zero inches of spacing is permissible.

6.9 SPACING AND SHIELDING REQUIREMENTS FOR SUSCEPTIBLE CABLES TO OTHER INTERFERENCE SOURCES

Special consideration must be given to susceptible cables that are to be routed near interference sources such as power distribution panels, fluorescent lights, motor generator sets, motors, transformers, controllers, and equipment cabinets.

6.9.1 Susceptor Categories S1 Through S4

Figure 6-8 provides the spacing and shielding requirements for susceptible cables to interference sources for the categories and group numbers listed. It is provided as guidance to afford protection to susceptible cables for the general case. The group numbers (of categories S1, S2, and S4) not listed in figure 6-8 are permitted zero inches of spacing without shielding.

6.9.2 Susceptor Categories R4 Through R8

Three inches of spacing are required between susceptible cables in these categories and interference sources listed in paragraph 6.9. When the 3-inch spacing cannot be achieved, shielding with flexible or rigid metal conduit is required. Cables in this category are permitted zero inches of spacing when 20 dB of shielding is provided.

6.10 GUIDELINES FOR EMC CABLEWAY DESIGN

The following general guidelines may be used in cableway design to implement the requirements of this section. Although there are many different cable categories and groups identified in Section 6, in practice only two separate cableways may be necessary to provide the required spacing to prevent radiator cables and equipment from inducing EMI into susceptor system cables.

6.10.1 Guidelines for Susceptor Cableway Design

The most sensitive susceptor cables will usually require a cableway separated from radiator cableways, external shielding conduit or both to prevent EMI. The following information is obtained from the cable spacing charts, figures 6-6 and 6-8.

a. Susceptor cables in categories S1, S2, S3 and S4 may be routed together with no spacing required between them.

b. If there are radiator cables (see figure 6-6) or interference sources (see figure 6-8) within 64 inches from the susceptor cable-way, an analysis shall be conducted in accordance with paragraph 6.8 to determine the spacing required between the radiator cable and equipment and susceptor cables for the specific situation involved. Route the susceptor cableway to obtain the necessary spacing. Those susceptor cables with requirements for zero spacing from radiator cables may be routed in a radiator cableway.

c. If the required spacing of figures 6-6 and 6-8 is not practical, recalculate the spacing requirements with the susceptor cables installed in flexible conduit.

d. If the required spacing of figures 6-6 and 6-8 is still not practical, recalculate the spacing requirements with the susceptor cable installed in flexible conduit inside an additional short piece of rigid or flexible conduit in a partial shielding application, see paragraph 6.7.1.

e. If the required spacing of figure 6-6 is still not practical, recalculate the spacing requirements with the radiator cables installed in rigid conduit. Partial shielding in accordance with Paragraph 6.7.1 should be considered where appropriate.

f. A minimum spacing of 8-inches, where practical, should be maintained between susceptor and radiator cableways to make an observable spacing which would prevent cable from being inadvertently routed between the radiator cableway and the susceptor cableway.

g. Indirect coupling paths may result from a cable routed with radiator cables for a portion of its run and then routed with or near susceptor cables for the remainder of its run. Therefore, cables shall remain in either the radiator cableway or susceptor cableway and shall not be routed from one to the other.

6.10.2 Guidelines for Radiator Cableway Design

The following information on radiator cableway design is obtained from the cable spacing chart of figure 6-6.

a. Radiator cables in categories R1, R2, R3 and R9 may be routed together, without spacing requirements.

6.10.3 Guidelines for Radiator/Susceptor and Less-Sensitive Susceptor Cable Cableway Design

Cables that are both radiators and susceptors (radiator/susceptor) and less-sensitive susceptor cables may be routed in cableways with radiator cables provided spacing requirements are maintained by installed hardware (spacers).

A possible radiator cableway layout (grouping of cables) which provides minimum cable spacing for radiator/susceptor cables by means of spacers is shown in the schematic below. The rectangles represent one-inch and two-inch spacers. The spacers indicated may be of any material and shape or form that provides and maintains the required spacing, is inexpensive, and has low flammability and toxicity. Some suggestions are a hollow or corrugated extrusion, "doughnuts", etc.

The minimum spacing requirements for the cable categories shown in the schematic below apply to cables not enclosed in shielding conduit. If cables are enclosed in shielding conduit, no spacing is required for that group of cables. The rationale for this cableway layout, based on figure 6-6, is provided below.

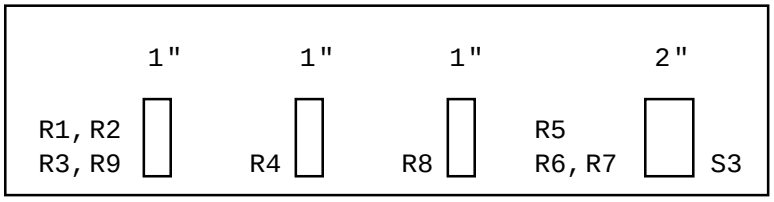

Cableway Schematic Showing Groupings and Spacers

a. R4 cables require one-inch spacing from the radiator cables R1, R2 and R3 and the radiator/susceptor cables R5, R6, and R7.

b. R5, R6 and R7 cables may be routed together.

c. R4 and R8 cables require one-inch spacing from each other and from radiator/susceptor cables R5, R6 and R7. The radiator/susceptor cables R5, R6 and R7 require from zero to two-inch spacing from radiator cables R1, R2 and R3.

d. R8 cables require one-inch spacing from radiator cables R1, R2, R3 and from radiator/susceptor cables R4, R5, R6 and R7.

e. R9 cables require zero spacing from radiator cables R1, R2 and R3. (NOTE, R9 may also be placed with R4, R5, R6, R7, R8 or S1, S2 and S3)

f. S3 cables require two-inch spacing from radiator cables R1, R2, R3 and from radiator/susceptor cables R4, R5, R6, R7 and R8.

g. Note; S1, S2 and S4 cables in cable group numbers 7 and 8 may be routed with the radiator/susceptor cables R4, R6, R7 and R8 with no spacing required, but require zero to two-inch spacing from radiator cables R1, R2 and R3. These susceptor cables could be placed in the S3 or R8 grouping of cables in the above cableway.

h. Note; for each radiator/susceptor cable category R4 or R5, R6, R7 or R8, the spacers or shielding conduit or a separate cableway may be used.

6.11 CABLE MARKING

All cables which are categorized by the application of the spacing and shielding requirements of section 6 should be identified by appropriate cable marking to simplify the installation procedure. Over the life cycle of a ship, cable categorization and marking will provide a significant reduction in cost by minimizing postinstallation fixes through cable configuration control. Once the cables have been categorized, wireway design becomes an extension of the cable spacing concept. This concept has been successfully implemented in the Trident submarine program.

Cable marking should convey specific information that includes (1) the cable number in accordance with ship's specifications and (2) the cable designator (in accordance with section 6) which describes the spacing and shielding requirements for a given cable.

Specific requirements for cable marking are listed below:

a. These categorized cables shall be identified with cable identification tags containing the above-mentioned information. The preferred cable identification tag is the metallic or nylon type that is embossed with raised letters and numbers. This type will ensure retention of information even after being painted.

b. Each cable shall have one tag attached to the cable near each end and also wherever the cable is terminated by connectors, stuffing tubes, etc., at locations such as an equipment, a junction box, both sides of a bulkhead, etc.

c. A cable which is enclosed in flexible metal shielding conduit or rigid metal shielding conduit shall be identified with the cable identification tags mounted on the conduit at the same locations as described in paragraph b above. The cable identification tag shall include the cable designator in accordance with table 6-1 that applies to the unshielded cable.

d. A cable which is enclosed in shielding conduit for only part of its entire length (partial shielding) shall be identified with tags mounted on both the exposed (unshielded) portion of the cable and on the conduit at the locations described in paragraph b above.

e. Cables serving a dual purpose (transmitting and receiving) shall be identified with both radiator and susceptor designators as shown in example 4 below.

f. A multifunction cable carrying signals that fall in radiator and susceptor categories shall be classified as both a radiator and a susceptor using the cable designator from figure 6-6 requiring the greatest cable spacing. This cable will be identified with both radiator and susceptor designators as shown in example 4.

g. A multifunction cable carrying signals that fall in more than one radiator category or in more than one susceptor category, shall be classified and marked with only the radiator or susceptor cable designator from figure 6-6 requiring the greatest cable spacing.

h. Special case cables shall be identified by adding "S" to the cable designator as shown in examples 5 and 6.

The following are examples of cable identification tag information.

Example No.	Cable No. (iaw ship's spec)	Cable Designator (iaw table 6-1)
1	R-RR28	(S1-4)
2	R-2SL57	(S4-1)
3	R-RT5	(R4)
4	R-SF58	(S4-1/R3-2)
5	R-3SF4	(S4-2S)
6	R-3F28	(S4-2/R2-3)S

The following EMC cableway caution tag is designed to be attached to cableways containing susceptor cables to remind ship and shipyard personnel not to inadvertently violate EMC cable spacing. This tag shall be attached with tie-wraps to the exterior of cableway supports or pans in visible locations approximately every 5 feet along the cableway. The preferred material for this tag is metal or nylon colored blue. The tag shall be embossed with raised letters. The letter size for the words "CAUTION" and "EMC CABLEWAY" shall be approximately 3/16 of an inch high, and the remainder of the text shall be approximately 1/8 of an inch high.

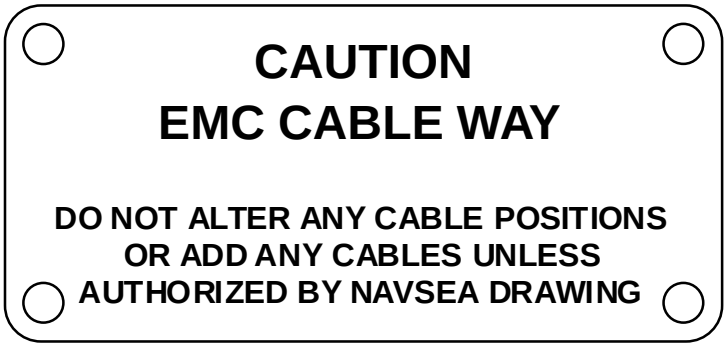

Cableway supports (hangers) and pans for susceptor cableways shall be painted blue.

MIL-C-915 CABLE TYPE	GROUP NUMBERS FOR CABLE CATEGORIES R1 AND R2								
	0	1	2	3	4	5	6	7	9
DCOP	ALL								
DHOF	3	4	6, 9, 14	23, 30		83		250, 400	
DNW	3	4	9, 14	23	50, 75, 100				
DNWA	3	4	9, 14	23	50, 75, 100				
DPS		3	4, 6	9, 14					
DRW	ALL								
DRWA	ALL								
DSGA	3	4	9, 14	23, 30, 40	50, 60, 75, 100	125, 150, 200	250, 300, 400		
DSGU	3	4	9, 14	23		200	300, 400		
DSS	2, 3	4							
FHOF	3	4	9	42	60	133			
FNW			3	4, 9	23				
FNWA			3	4, 9	23				
FPS					14				
FSGA				3, 4	9	23	50, 75, 100	150, 200	
FSGU				3, 4	9	23	50, 75, 100	150, 200	
FSS	2, 3	4							
MCOS			ALL						
MDU					6	14	23	40, 60	
MHOF			ALL						
MMOP	2, 5								
MNW					ALL				
MNWA					ALL				
MS					ALL				
MSA					ALL				
MSCA					ALL				
MSCS					ALL				
MSCU					ALL				
MSS					ALL				
MA		14							
MU		14							
MUS		14							
MWF					ALL				
TCOP	ALL								
THOF	3	4	6, 9, 14	23, 30, 40		150		250, 400	500, 600
TNW	3	4	6, 9, 14	23	50, 75, 100	150			
TNWA	3	4	9, 14	23	50, 75, 100	150			
TPNW	ALL								
TPNWA	ALL								
TPS		3	4, 6	9, 14	23, 30				
TRW	ALL								
TRWA	ALL								
TSGA	3	4	9, 14	23, 30, 40	50, 60, 75, 100	125, 150, 200	250, 300, 400		
TSGU	3	4	9, 14	23	50, 75, 100	150, 200	300, 400		

Figure 6-1. Cables in Categories R1 and R2 (Sheet 1 of 3)

MIL-C-915 CABLE TYPE	GROUP NUMBERS FOR CABLE CATEGORIES R1 AND R2								
	0	1	2	3	4	5	6	7	9
TSS	2,3	4							
TTRS & TTRSA	ALL								
TTSA & TTSU	ALL								
2A	ALL								
2AU & 2AUS	ALL								
2SA	ALL								
2SJ & 2SJA	ALL								
2SU & 2SUS	ALL								
2SWA	ALL								
2SWAU	ALL								
2SWF	ALL								
2SWU & 2SWUA	ALL								
3SA	ALL								
3SJ & 3SJA		ALL							
3SU & 3SUS	ALL								
3SWA	ALL								
3SWU & 3SWUS	ALL								
3U & 3UA	ALL								
4SJ & 4SJA		ALL							
5KVTSGA							150, 200, 250	300, 350, 400	
5KVTSGU							150, 200, 250	300, 350, 400	
6SGA & 6SGU									ALL
7PS				ALL					
7SGA & 7SGU				ALL					
7SS	2								

1. THE NUMBERS FOUND IN THE GROUP NUMBER COLUMNS 0 THROUGH 7, AND 9 ARE CABLE-TYPE SUFFIX NUMBERS (RELATED TO THE ELECTRICAL CHARACTERISTICS OF THE CABLE). EXAMPLE: A DHOF-83 CABLE IS FOUND IN ROW 2, GROUP NUMBER COLUMN 5. THUS A DHOF-83 CABLE IS ASSIGNED CABLE DESIGNATOR R1-5 IF IT CARRIES 60Hz POWER OR R2-5 IF IT CARRIES 400Hz POWER.
2. THE WORD ALL MEANS ALL CABLES OF THAT TYPE FALL IN THE SAME GROUP. EXAMPLE: IN ROW 1, ALL DCOP CABLES FALL IN GROUP NUMBER 0. THUS ALL DCOP CABLES ARE ASSIGNED CABLE DESIGNATOR R1-0 IF THEY CARRY 60 Hz POWER, OR R2-0 IF THEY CARRY 400Hz POWER.

*3. MOST MIL-C-915 CABLES HAVE AN EQUIVALENT MIL-C-24643 LOW-SMOKE VERSION. WHERE AN EQUIVALENT VERSION DOES EXIST, SIMPLY ADD THE LETTERS “LS” (FOR LOW-SMOKE) IN FRONT OF THE MIL-C-915 CABLE TYPE TO GET THE EQUIVALENT MIL-C-24643 CABLE TYPE. FOR EXAMPLE, LSDCOP IS THE LOW-SMOKE VERSION OF DCOP AND IS ASSIGNED THE SAME CATEGORY AND GROUP NUMBERS AS THE CDOP.

Figure 6-1. Cables in Categories R1 and R2 (Sheet 2 of 3)

*MIL-C-24640 (LIGHTWEIGHT) CABLE TYPE	GROUP NUMBERS FOR CABLE CATEGORIES R1 AND R2				
	0	1	2	3	4
DX	3, 4				
DXA	3, 4				
DXW	3, 4				
DXOW	3, 4				
DXWA	3, 4				
FX	3, 4				
FXA	3, 4				
FXW	3, 4				
FXWA	3, 4				
MXSO	2, 9, 21, 37				
MXCW	ALL				
MXCOW	ALL				
MXCWA	ALL				
MXO	10, 14				
TTXS	2, 4				
TTXSA	2, 4				
TTXSO	2, 6, 8, 10				
TTXW	ALL				
TTXOW	ALL				
TTXWA	ALL				
TX	3, 4				
TXA	3, 4				
TXW	3, 4				
TXWA	3, 4				
2XAO	ALL				
2XS	ALL				
2XSA	ALL				
2XSO	ALL				
2XSAW	3, 7, 14				
2XSAOW	ALL				
2XSAWA	3, 7, 14				
2XSW	1, 3, 7				
2XSOW	3, 7, 12, 19, 30				
2XSWA	1, 3, 7				
3XS	7				
3XSA	7				
3XSW	3, 7, 10, 14				
3XSOW	ALL				
3XSWA	3, 7, 10, 14				
7XW	3, 4				
7XWA	3, 4				

Figure 6-1. Cables in Categories R1 and R2 (Sheet 3 of 3)

CATE-GORY	GROUP NO.	MIL-C-915*** AND MIL-C-17 CABLE TYPE
R3	1	2U & 2UA
	2	DSS 2 FSS 2 MSS 2 MSS 6 2SJ-18 TO 22 2SJA-18 TO 22 2SU & 2SUS 2SWF
	3	DSS 3 DSS 4 FSS 4 TSS 4 2SJ-14 TO 16 2SJA-14 TO 16 3SU & 3SUS 7SS-2
R4	(NONE)	ALL RG COAX
R5**	(NONE)	DLT TPNW TTOP TTRS & TTRSA TTSU & TTSA 1SAU & 1SA 1SMU & 1SMA 1SMWU & 1SMWA 1SU & 1SUA 1SWF 1SWU & 1SWA 1S50MU & 1S50MA 1S50MUS 1S75MU & 1S75MA 2A 2AU 2SJ-14 TO 22 2SJA-14 TO 22 2SU & 2SUS 2SWAU & 2SWA 2SWF 2SWU & 2SWUA 2U & 2UA 2WAU & 2WA 3SU & 3SUS 3SWA 3SWU & 3SWUS 3U & 3UA

CATE-GORY	GROUP NO.	MIL-C-915*** CABLE TYPE
R6	1	DNW-3* & DNWA-3* DSGU-3* & DSGA-3* TNW-3* & TNWA-3* TSS 3 TTRS & TTRSA 2A 2AU 2SA 2SJ-14 TO 22 2SJA-14 TO 22 2SU & 2SUS 2SWAU & 2SWA 2SWF 2SWU & 2SWUA 2U & 2UA 2WAU & 2WA 3SU & 3SUS 3SWA 3SWU & 3SWUS 3U & 3UA
	2	MNW & MNWA MSCA MSCU & MSCS MS & MSA MSS MWF
R7	1	DNW-3* & DNWA-3* DSGU-3* & DSGA-3* TNW-3* & TNWA-3* TSS 3 TTRS & TTRSA 2A 2AU 2SA 2SJ-14 TO 22 2SJA-14 TO 22 2SU & 2SUS 2SWAU & 2SWA 2SWF 2SWU & 2SWUA 2U & 2UA 2WAU & 2WA 3SU & 3SUS 3SWA 3SWU & 3SWUS 3U & 3UA

CATE-GORY	GROUP NO.	MIL-C-915*** AND MIL-C-17 CABLE TYPE
R7	2	MNW & MNWA MSCA MSCU & MSCS MS & MSA MSS MWF
R8	(NONE)	TTRS & TTRSA 1SAU & 1SA 1SMU & 1SMA 1SMWU & 1SMWA 1SU & 1SUA 1SWF 1SWU & 1SWA 1S50MU & 1S50MA 1S50MUS 1S75MU & 1S75MA 2A 2SA 2SJ-14 TO 22 2SJA-14 TO 22 2SU & 2SUS 2SWAU & 2SWA 2SWF 2SWU & 2SWUA 2U & 2UA 2WAU & 2WA ALL RG COAX

* THIS CABLE UNSHIELDED, USE FOR ROTOR EXCITATION ONLY.

** THE R5 CATEGORY CABLES SELECTED SHOULD BE OF THE SHIELDED TYPES WHEN THEY ARE TO BE RUN IN WIREWAYS WITH POWER CABLES.

*** MOST MIL-C-915 CABLES HAVE AN EQUIVALENT MIL-C-24643 LOW-SMOKE VERSION. WHERE AN EQUIVALENT VERSION DOES EXIST SIMPLY ADD THE LETTERS “LS” (FOR LOW-SMOKE) IN FRONT OF THE MIL-C-915 CABLE TYPE TO GET THE EQUIVALENT MIL-C-24643 CABLE TYPE. FOR EXAMPLE, LSTTRS IS THE LOW-SMOKE VERSION OF TTRS AND IS ASSIGNED THE SAME CATEGORY AND GROUP NUMBERS AS THE TTRS.

Figure 6-2. Cables in Categories R3 Through R8 (Sheet 1 of 2)

CATE-GORY	GROUP NO.	MIL-C-24640 CABLE TYPE
R3	1	2XS
		2XSA
		2XSO
	2	3XS
		3XSA
	3	(NONE)
R4	(NONE)	(NONE)
R5	(NONE)	TTX
		TTXA
		TTXS
		TTXSA
		TTXSO
		TTXW
		TTXOW
		TTXWA
		1XMSO
		1XSOW
		2XAO
		2XO
		2XOW
		2XS
		2XSA
		2XSO
		2XSAW
		2XSAOW
		2XSAWA
		2XSXO
		3XS
		3XSA
		3XSW
		3XSOW
		3XSWA
R6	1	DX-3, 4
		DXA-3, 4
		DXW-3, 4
		DXOW-3, 4
		DXWA-3, 4
		MXCW
		MXCOW

CATE-GORY	GROUP NO.	MIL-C-24640 CABLE TYPE
R6	1	MXCWA
		MXSO
		TTXS
		TTXSA
		TTXSO
		TX-3
		TXA-3
		2XAO
		2XO
		2XOW
		2XS
		2XSA
		2XSO
		2XSAW
		2XSAOW
		2XSAWA
		2XSW
		2XSOW
		2XSWA
		2XSXO
		3XS
		3XSA
		3XSW
		3XSOW
		3XSWA
	2	(NONE)
R7	1	DX-3, 4
		DXA-3, 4
		DXW-3, 4
		DXOW-3, 4
		DXWA-3, 4
		MXCW
		MXCOW
		MXCWA
		MXSO
		TTXS
		TTXSA
		TTXSO
		TX-3
		TXA-3

CATE-GORY	GROUP NO.	MIL-C-24640 CABLE TYPE
R7	1	2XAO
		2XS
		2XSA
		2XSO
		2XSAW
		2XSAOW
		2XSAWA
		2XSW
		2XSOW
		2XSWA
		3XS
		3XSA
		3XSW
		3XSOW
		3XSWA
	2	(NONE)
R8	(NONE)	TTXS
		TTXSA
		TTXSO
		1XMSO
		1XSOW
		2XO
		2XOW
		2XS
		2XSA
		2XSO
		2XSAW
		2XSAOW
		2XSAWA
		2XSW
		2XSOW
		2XSWA
		2XSXO

Figure 6-2. Cables in Categories R3 Through R8 (Sheet 2 of 2)

*MIL-C-915 CABLE TYPE	GROUP NUMBERS FOR CABLE CATEGORY R9		
	1	2	3
DCOP	ALL		
DHOF	3, 4, 6, 9, 14	23, 30	83, 250, 400
DNW & DNWA	3, 4, 9, 14	23, 50, 75, 100	
DPS	3, 4, 6	9	
DRW & DRWA	ALL		
DSGA & DSGU	3, 4, 9, 14	23, 30, 40, 50, 60, 75, 100	125, 150, 200, 250, 300, 400
DSS	2, 3, 4		
FHOF	3, 4, 9	42, 60	133
FNW & FNWA	3	4, 9, 23	
FPS		14	
FSGA & FSGU		3, 4, 9	23, 50, 75, 100, 150, 200
FSS	2, 3, 4		
MA	14		
MCOS	ALL		
MDU		6	14, 23, 40, 60
MHOF	ALL		
MMOP	2, 5		
MNW & MNWA		ALL	
MS & MSA		ALL	
MSCA		ALL	
MSCS & MSCU		ALL	
MSS	ALL		
MU & MUS	14		
TCOP	ALL		
THOF	3, 4, 6, 9, 14	23, 30	150, 250, 400
TNW & TNWA	3, 4, 9, 14	23, 50, 75, 100	150
TPNW & TPNWA	ALL		
TPS	3, 4, 6	9, 14, 23, 30	
TRW & TRWA	ALL		
TSGA & TSGU	3, 4, 9, 14	23, 30, 40, 50, 60, 75, 100	125, 150, 200, 250, 300, 400
TSS	2, 3, 4		
TTSU	ALL		
2A & 2AU	ALL		
2AUS	ALL		

Figure 6-3. Cables in Category R9 (Sheet 1 of 3)

*MIL-C-915 CABLE TYPE	GROUP NUMBERS FOR CABLE CATEGORY R9		
	1	2	3
2SA	ALL		
2SJ & 2SJA	ALL		
2SU & 2SUS	ALL		
2SWA & 2SWAU	ALL		
2SWF	ALL		
2SWU & 2SWUA	ALL		
2U & 2UA	ALL		
2WA & 2 WAU	ALL		
3SA	ALL		
3SJ & 3SJA	ALL		
3SU & 3SUS	ALL		
3SWA	ALL		
3SWU & 3SWUS	ALL		
3U & 3UA	ALL		
4SJ & 4SJA	ALL		
5KVTSGA			150, 200, 250, 300, 350, 400
5KVTSGU			150, 200, 250, 300, 350, 400
6SGA & 6SGU			ALL
7PS		ALL	
7SGA & 7SGU		ALL	
7SS	ALL		

NOTES:

1. THE NUMBERS FOUND IN THE GROUP NUMBER COLUMNS 1 THROUGH 3 ARE CABLE-TYPE SUFFIX NUMBERS (RELATED TO THE ELECTRICAL CHARACTERISTICS OF THE CABLE). EXAMPLE: A DHOF-23 OR A DHOF-30 CABLE IS FOUND IN ROW 2, GROUP NUMBER COLUMN 2.
2. THE WORD ALL MEANS ALL CABLE S OF THAT TYPE FALL IN THE SAME GROUP. EXAMPLE: IN ROW 1 ALL DCOP CABLES FALL IN GROUP NUMBER 1.
3. CABLES THAT CARRY DC USED FOR SIGNAL OR CONTROL FUNCTIONS SHALL BE OF THE SHIELDED CABLE TYPES LISTED.
4. MOST MIL-C-915 CABLES HAVE AN EQUIVALENT MIL-C-24643 LOW-SMOKE VERSION. WHERE AN EQUIVALENT VERSION DOES EXIST SIMPLY ADD THE LETTERS “LS” (FOR LOW-SMOKE) IN FRONT OF THE MIL-C-915 CABLE TYPE TO GET THE EQUIVALENT MIL-C-24643 CABLE TYPE. FOR EXAMPLE, LS2SA IS THE LOW-SMOKE VERSION OF 2SA AND IS ASSIGNED THE SAME CATEGORY AND GROUP NUMBERS AS THE 2SA.

Figure 6-3. Cables in Category R9 (Sheet 2 of 3)

*MIL-C-24640 (LIGHTWEIGHT) CABLE TYPE	GROUP NUMBERS FOR CABLE CATEGORY R9		
	1	2	3
DX	3, 4		
DXA	3, 4		
DXW	3, 4		
DXOW	3, 4		
DXWA	3, 4		
FX	3, 4		
FXA	3, 4		
FXW	3, 4		
FXWA	3, 4		
MXSO	2, 9, 21, 37		
MXCW	ALL		
MXCOW	ALL		
MXCWA	ALL		
MXO	10, 14		
TTXW	ALL		
TTXOW	ALL		
TTXWA	ALL		
TX	3, 4		
TXA	3, 4		
TXW	3, 4		
TXWA	3, 4		
1XSOW	ALL		
2XAO	2, 7, 10, 18, 40		
2XO	ALL		
2XOW	ALL		
2XS	ALL		
2XSA	ALL		
2XSO	ALL		
2XSAW	3, 7, 14		
2XSAOW	ALL		
2XSAWA	3, 7, 14		
2XSW	1, 3, 7		
2XSOW	3, 7, 12, 19,30		
2XSWA	1, 3, 7		
2XSXO	4		
3XS	7		
3XSA	7		
3XSW	3, 7, 10, 14		
3XSOW	3, 7, 10, 14, 19, 24		
3XSWA	3, 7, 10, 14		
7XW	3, 4		
7XWA	3, 4		

Figure 6-3. Cables in Category R9 (Sheet 3 of 3)

CATE-GORY	GROUP NO.	MIL-C-915*** AND MIL-C-17 CABLE TYPE
S1	1 THRU 8*	**
S2	1 THRU 8*	DSS FSS MSS TSS TTRS TTRSA 2SA 2SJ-14 TO 22 2SJA-14 TO 22 2SU 2SUS 2SWA 2SWAU 2SWF 2SWU 2SWUA 2U 2UA 2WA 2WAU
S3	(NONE)	ALL RG COAX DSS FSS MSS TSS TTRS TTRSA 2SA 2SU 2SUS 2SWA 2SWAU 2SWF 2SWU 2SWUA 2U 2UA 2WA 2WAU
S4	1 THRU 8*	DSS FSS MSPU PBTMU & PBTM RG-22 TCJU & TCJA TCJX TCKX TCPX TCTU & TCTA TCTX TSS TTRS & TTRSA 2SA 2SJ-14 TO 22 2SJA-14 TO 22 2SU & 2SUS 2SWA 2SWAU 2SWF 2SWU & 2SWUA 2U & 2UA 2WAU & 2WA 4SJ-14 TO 20 4SJA-14 TO 20

* SEE FIGURE 6-5 FOR GROUP NUMBER.

** ALL RG CABLES EXCEPT RG-220, RG-221, RG-294, AND RG-296. SPACING REQUIREMENTS FOR CABLES RG-330, RG-221, RG-294, AND RG-296 MUST BE HANDLED ON A SPECIAL CASE BASIS.

*** MOST MIL-C-915 CABLES HAVE AN EQUIVALENT MIL-C-24643 LOW-SMOKE VERSION. WHERE AN EQUIVALENT VERSION DOES EXIST SIMPLY ADD THE LETTERS “LS” (FOR LOW-SMOKE) IN FRONT OF THE MIL-C-915 CABLE TYPE TO GET THE EQUIVALENT MIL-C-24643 CABLE TYPE. FOR EXAMPLE, LSTTRS IS THE LOW-SMOKE VERSION OF TTRS AND IS ASSIGNED THE SAME CATEGORY AND GROUP NUMBERS AS THE TTRS.

Figure 6-4. Cables in Categories S1 Through S4 (Sheet 1 of 2)

CATE-GORY	GROUP NO.	MIL-C-24640 CABLE TYPE
S1	1 THRU 8	(NONE)*
S2	1 THRU 8	TTXS
		TTXSA
		TTXSO
		2XO
		2XOW
		2XS
		2XSA
		2XSO
		2XSAW
		2XSAOW
		2XSAWA
		2XSW
		2XSOW
		2XSWA
		2XSXO

CATE-GORY	GROUP NO.	MIL-C-24640 CABLE TYPE
S3	(NONE)	
		TTXS
		TTXSA
		TTXSO
		2XO
		2XOW
		2XS
		2XSA
		2XSO
		2XSAW
		2XSAOW
		2XSAWA
		2XSW
		2XSOW
		2XSWA
		2XSXO

CATE-GORY	GROUP NO.	MIL-C-24640 CABLE TYPE
S4	1 THRU 8	
		TTXS
		TTXSA
		TTXSO
		2XO
		2XOW
		2XS
		2XSA
		2XSO
		2XSAW
		2XSAOW
		2XSAWA
		2XSW
		2XSOW
		2XSWA
		2XSXO

*THE S1 CATEGORY IS TYPICALLY ASSIGNED TO RG CABLES (PER MIL-C-17). SINCE THERE ARE NO LIGHTWEIGHT VERSIONS OF RG CABLES, NONE OF THE MIL-C-24640 CABLES ARE ASSIGNED THE S1 CATEGORY.

Figure 6-4. Cables in Categories S1 Through S4 (Sheet 2 of 2)

CATEGORY	GROUP NUMBER	GROUP VOLTAGE V2
S1, S2, S4	1	-180 TO -160 dBV (1.0 to 10 nanovolts)
	2	-160 TO -140 dBV (10 to 100 nanovolts)
	3	-140 TO -120 dBV (0.1 to 1.0 microvolts)
	4	-120 TO -100 dBV (1.0 to 10 microvolts)
	5	-100 TO -80 dBV (10 to 100 microvolts)
	6	-80 TO -60 dBV (0.1 to 1.0 millivolts)
	7	-60 TO -40 dBV (1.0 to 10 millivolts)
	8	-40 TO -20 dBV (0.01 to 0.1 volts)

NOTES:

1. EQUIPMENT DESIGN PERFORMANCE SENSITIVITY, V1 (dBV), WILL NORMALLY BE SUPPLIED BY THE EQUIPMENT MANUFACTURER, OR IT CAN BE OBTAINED FROM GOVERNMENT OR CONTRACTOR FURNISHED INFORMATION. A LIMITED LIST OF CATEGORIZED INPUT SIGNAL CABLING FOR EXISTING GFE ABOARD SSN AND SSBN SHIPS MAY BE OBTAINED FROM (CONFIDENTIAL) NUSC TECH. MEMO NO. 871161 DTD 2 SEPT 1988.
2. WHEN THE EQUIPMENT DESIGN PERFORMANCE SENSITIVITY, V1 (dBV), IS GREATER THAN -20 dBV (0.1 VOLTS), FOR EXAMPLE: -10 dBV, THE ASSOCIATED CABLE MUST BE ASSIGNED AN "R" CATEGORY.
3. CABLE SPACING WITHOUT SHIELDING.

   TO ESTABLISH THE GROUP NUMBER FOR CATEGORIES S1, S2, OR S4, LOCATE THE GROUP VOLTAGE V2 (dBV) THAT INCLUDES V1 (dBV). THE GROUP NUMBER ASSOCIATED WITH THIS GROUP VOLTAGE WILL BE THE GROUP NUMBER FOR THE SUSCEPTOR CATEGORY.
4. CABLE SPACING WITH SHIELDING.

   TO ESTABLISH THE GROUP NUMBER FOR CATEGORIES S1, S2, OR S4, LOCATE THE GROUP VOLTAGE V2 (dBV) THAT INCLUDES V3 (dBV). THE GROUP NUMBER ASSOCIATED WITH THIS GROUP VOLTAGE WILL BE THE GROUP NUMBER FOR THE SUSCEPTOR CATEGORY.
5. IN A SITUATION WHERE THE EQUIPMENT DESIGN PERFORMANCE SENSITIVITY, V1 (dBV), CANNOT BE OBTAINED, WITH NAVSEA APPROVAL THE FOLLOWING GUIDE MAY BE EMPLOYED AS A LAST RESORT. IT MUST BE UNDERSTOOD THAT THIS MAY LEAD TO AN EXCESSIVE SPACING AND SHIELDING REQUIREMENT, HENCE SHOULD BE USED SPARINGLY.
   a. LOW-LEVEL RECEIVING SIGNALS (NON-AMPLIFIED), SUCH AS SONAR, RADIO, NAVIGATION: V1 = -170 dBV
   b. LOW-LEVEL RECEIVING SIGNALS (AMPLIFIED), SUCH AS SONAR, RADIO, NAVIGATION: V1 = -150 dBV
   c. LOW-LEVEL SENSOR SIGNALS (NON-AMPLIFIED), SUCH AS STRAIN GAGES, RTD'S, ACCELEROMETERS, MICROPHONES, THERMOCOUPLES, ETC.: V1 = -110 dBV
   d. LOW-LEVEL SENSOR SIGNALS (AMPLIFIED), SUCH AS STRAIN GAGES, RTD'S, ACCELEROMETERS, MICROPHONES, THERMOCOUPLES, ETC.: V1 = -90 dBV

   BECAUSE OF THE APPROXIMATION, THE RESULTING CABLE DESIGNATOR IS CONSIDERED A SPECIAL CASE AND SHOULD BE MARKED ACCORDINGLY.

Figure 6-5. Categories S1, S2, and S4, Group Numbers and Associated Group Voltages

RADIATOR CABLE DESIGNATOR		SUSCEPTOR CABLE DESIGNATOR																																
		S1								S2								S3	S4							R4	R5	R6		R7		R8
		1	2	3	4	5	6	7	8	1	2	3	4	5	6	7	8		1	2	3	4	5	6	7	8			1	2	1	2	
	0	3	3	2	1	1	1	0	0	3	2	1	1	1	0	0	0	2	4	3	3	1	1	1	0	0	1	0	0	0	0	0	1
R	1	4	3	3	2	1	1	0	0	3	3	2	1	1	0	0	0	2	4	3	3	1	1	1	0	0	1	0	0	0	0	0	1
A	2	6	5	3	2	1	1	0	0	5	3	2	1	1	0	0	0	2	6	5	3	3	1	1	0	0	1	0	0	0	0	0	1
D	3	9	6	4	3	1	1	1	0	6	4	3	1	1	1	0	0	2	9	7	4	4	2	1	1	0	1	0	0	1	0	1	1
I	R1 4	13	9	6	5	2	1	1	0	9	6	5	2	1	1	0	0	2	13	10	6	5	2	1	1	0	1	0	0	1	0	1	1
A	5	19	13	8	7	3	1	1	0	13	8	7	3	1	1	0	0	2	19	14	9	7	3	1	1	0	1	0	0	1	0	1	1
T	6	25	18	11	8	3	1	1	0	18	11	8	3	1	1	0	0	2	26	19	12	8	4	2	1	0	1	0	0	1	0	1	1
O	7	33	23	13	9	3	1	1	0	23	13	9	3	1	1	0	0	2	34	25	15	11	4	2	1	0	1	0	0	1	0	1	1
R	9	46	31	18	9	3	1	1	0	31	18	9	3	1	1	0	0	2	47	33	19	10	3	1	1	0	1	0	0	1	0	1	1
	0	5	4	3	3	2	1	1	0	4	3	3	2	1	1	0	0	2	4	3	3	2	1	1	1	0	1	0	0	0	0	0	1
C	1	5	4	3	3	2	1	1	0	4	3	3	2	1	1	0	0	2	5	4	3	3	2	1	1	0	1	0	0	0	0	0	1
A	2	9	7	4	3	3	1	1	1	7	4	3	3	1	1	1	0	2	8	6	4	3	2	1	1	0	1	0	1	1	1	1	1
B	3	12	10	7	5	4	2	1	1	10	7	5	4	2	1	1	0	2	11	9	6	4	3	1	1	1	1	1	1	1	1	1	1
L	R2 4	18	14	10	7	5	2	1	1	14	10	7	5	2	1	1	0	2	17	13	9	6	5	2	1	1	1	1	1	1	1	1	1
E	5	25	20	15	10	7	3	1	1	20	15	10	7	3	1	1	0	2	23	18	13	8	7	3	1	1	1	1	1	2	1	2	1
	6	34	27	20	13	8	4	2	1	27	20	13	8	4	2	1	0	2	32	25	17	11	8	3	1	1	1	1	1	2	1	2	1
D	7	45	35	25	15	12	5	2	1	35	25	15	12	5	2	1	0	2	42	32	23	13	9	3	1	1	1	1	1	2	1	2	1
E	9	64	49	34	20	10	4	1	1	49	34	20	10	4	1	1	0	2	59	45	31	17	8	3	1	1	1	1	0	1	1	2	1
S	1	4	4	3	2	2	1	1	1	4	3	2	2	1	1	1	1	2	4	3	2	2	1	1	1	1	1	1	1	1	1	1	1
I	R3 2	5	4	4	3	2	2	1	1	4	4	3	2	2	1	1	1	2	4	4	3	2	2	1	1	1	1	1	1	1	1	1	1
G	3	7	6	5	4	3	3	2	1	6	5	4	3	2	1	1	1	2	6	5	4	3	2	1	1	1	1	1	1	1	1	1	1
N	R4	2	2	2	1	1	1	0	0	2	2	1	1	1	0	0	0	2	3	2	2	1	1	1	0	0	0	1	1	1	1	1	1
A	R5	3	2	1	1	1	1	1	0	2	2	1	1	1	1	0	0	2	3	2	1	1	1	1	0	0	1	0	0	0	0	0	1
T	1	2	1	1	1	0	0	0	0	1	1	1	0	0	0	0	0	2	2	1	1	1	0	0	0	0	1	0	0	0	0	0	1
O	R6 2	7	3	2	1	1	0	0	0	3	2	1	1	0	0	0	0	2	7	3	1	1	0	0	0	0	1	0	0	0	0	0	1
R	1	3	2	1	1	1	0	0	0	2	1	1	1	0	0	0	0	2	3	2	1	1	1	0	0	0	1	0	0	0	0	0	1
	R7 2	14	7	4	1	1	0	0	0	7	4	1	1	1	0	0	0	2	12	7	3	1	1	0	0	0	1	0	0	0	0	0	1
	R8	4	3	2	2	1	1	0	0	3	2	2	1	1	0	0	0	2	3	2	1	1	1	1	0	0	1	1	1	1	1	1	0
	1	0	0	0	0	0	0	0	0	0	0	0	0	0	0	0	0	0	3	2	1	1	0	0	0	0	0	0	0	0	0	0	0
	R9 2	0	0	0	0	0	0	0	0	0	0	0	0	0	0	0	0	0	6	5	2	1	1	0	0	0	0	0	0	0	0	0	0
	3	0	0	0	0	0	0	0	0	0	0	0	0	0	0	0	0	0	16	8	3	1	1	0	0	0	0	0	0	0	0	0	0

NOTES:

1. SPACING REQUIREMENTS SHOWN ON THE CHART ARE IN INCHES AND MEASURED BETWEEN THE CLOSEST SURFACE OF THE OUTER SHEATH OR SHIELD CONDUIT OF THE INDIVIDUAL CABLES. (SEE FIGURE 6-9).
2. DATA IN THIS FIGURE HAS BEEN CHANGED FROM THE ORIGINAL S9407-AB-HBK-010.

Figure 6-6. Spacing Chart for Radiator and Susceptor Cables

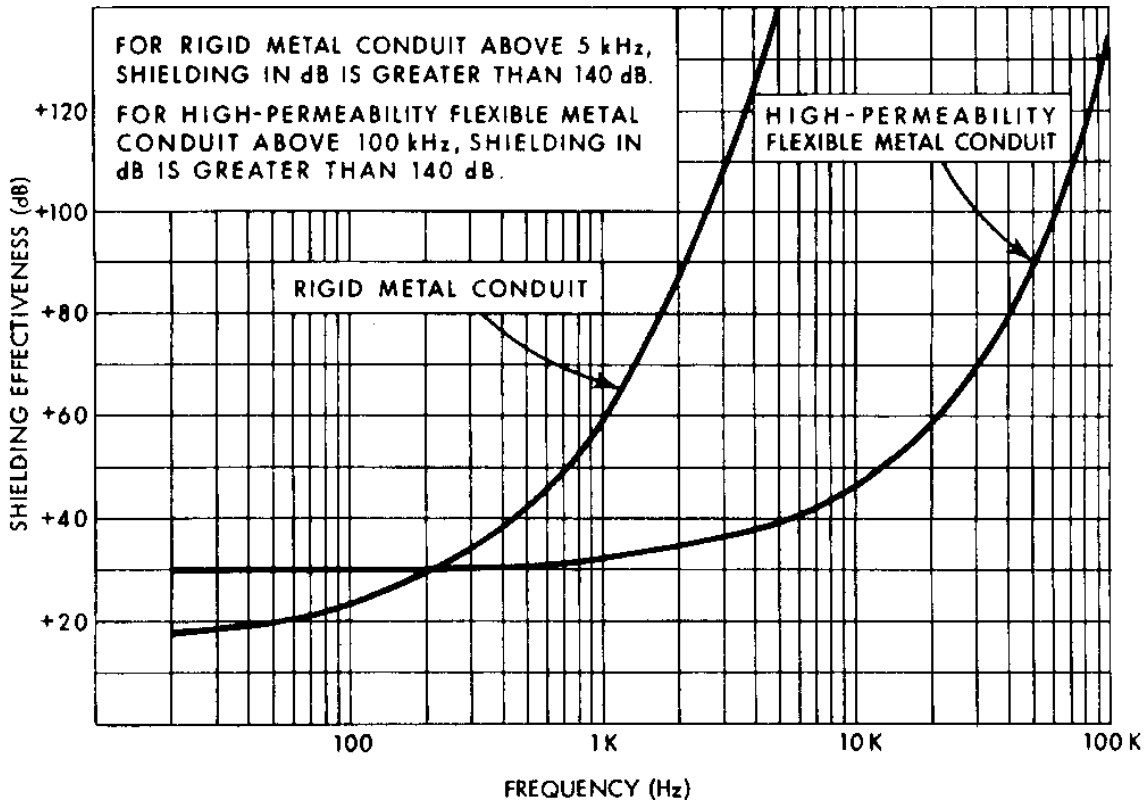

Figure 6-7. Shielding Effectiveness of Conduit Versus Frequency

INTERFERENCE SOURCES	TYPE OF CABLE SHIELDING (SEE NOTE 3)	SUSCEPTOR CABLE DESIGNATOR														
		S1					S2				S3	S4				
		1	2	3	4	5	1	2	3	4		1	2	3	4	5
400-Hz SOURCES (SEE NOTE 1)	NO SHIELDING	40	18	6	2	0	18	6	2	0	12	30	10	4	1	0
	FLEX CONDUIT	2	1	1	0	0	1	1	0	0	0	8	4	1	0	0
	RIGID CONDUIT	0	0	0	0	0	0	0	0	0	0	10	4	1	0	0
60-Hz SOURCES (SEE NOTE 2)	NO SHIELDING	12	4	1	0	0	4	1	0	0	3	12	4	1	0	0
	FLEX CONDUIT	1	0	0	0	0	0	0	0	0	0	3	1	0	0	0
	RIGID CONDUIT	0	0	0	0	0	0	0	0	0	0	4	1	0	0	0

NOTES:

1. 400-Hz SOURCES INCLUDE POWER DISTRIBUTION PANELS, MOTOR GENERATOR SETS, MOTORS, TRANSFORMERS, CONTROLLERS, AND EQUIPMENT CABINETS.
2. 60-Hz SOURCES INCLUDE POWER DISTRIBUTION PANELS, FLOURESCENT LIGHTS, MOTOR GENERATOR SETS, MOTORS, TRANSFORMERS, CONTROLLERS, AND EQUIPMENT CABINETS.
3. SEE PARAGRAPHS 6.7.3 AND 6.7.4 FOR SPECIFIED FLEXIBLE METAL CONDUIT AND RIGID METAL CONDUIT RESPECTIVELY.
4. EXAMPLE OF CHART USE: A SUSCEPTOR CABLE HAVING THE DESIGNATOR S4-1, AND SHIELDED IN FLEXIBLE METAL CONDUIT IS TO BE ROUTED NEAR A 60-Hz POWER DISTRIBUTION PANEL. THE INTERSECTION OF THE “S4-1” COLUMN AT THE “60-Hz SOURCES-FLEX CONDUIT” LINE INDICATES A SPACING OF 3 INCHES.
5. SPACING REQUIREMENTS SHOWN ON THE CHART ARE GIVEN IN INCHES AND ARE MEASURED FROM THE OUTER SURFACE OF THE SHIELDING CONDUIT OR CABLE TO THE NEAREST SURFACE OF THE INTERFERENCE SOURCE. (SEE FIGURE 6-9).

Figure 6-8. Spacing and Shielding Chart for Susceptible Cables (Categories S1 Through S4) to Interference Sources

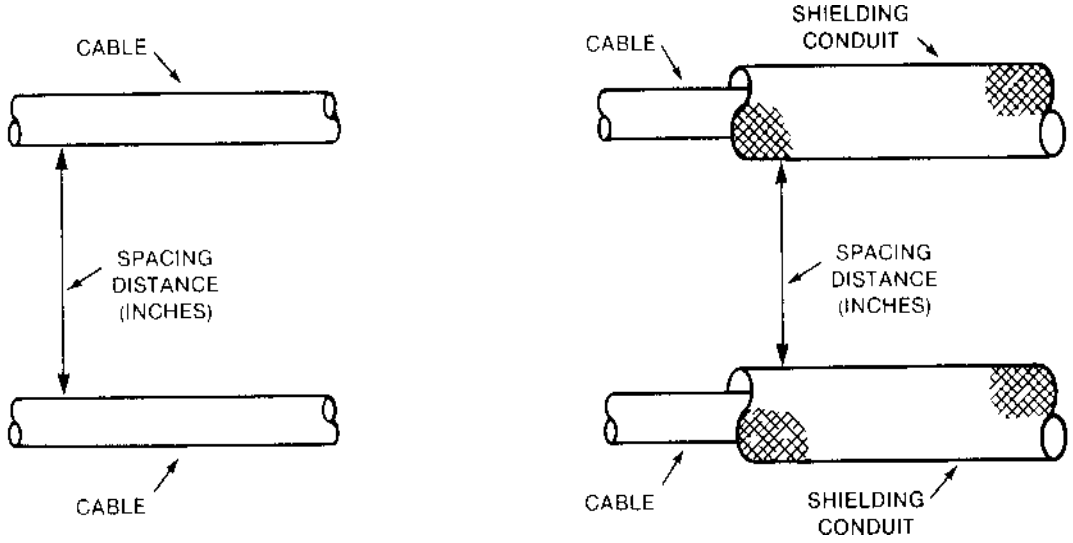

Figure 6-9. Measurement of Cable Spacing Distances

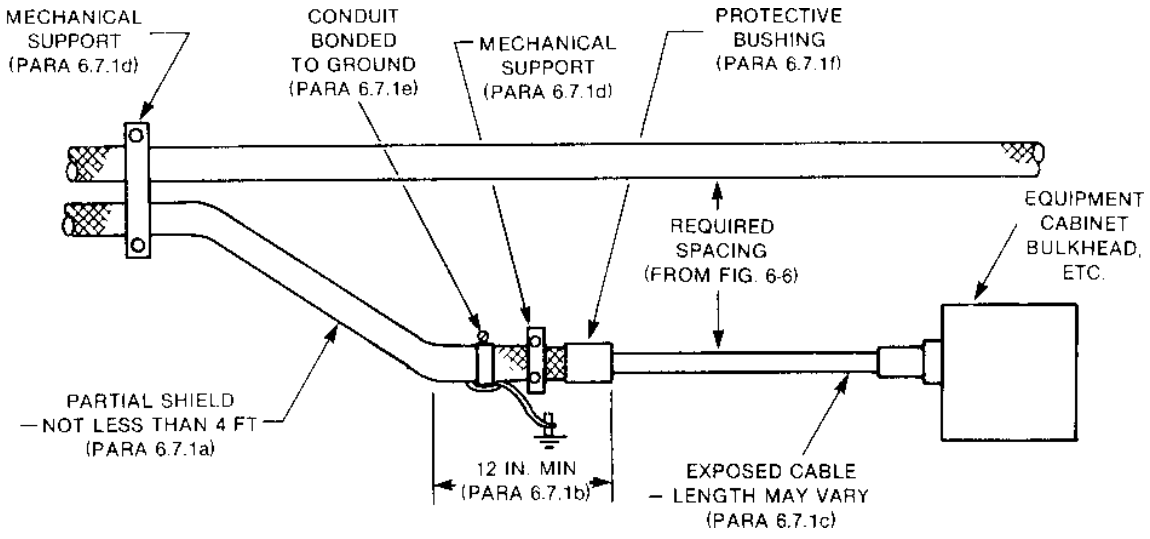

Figure 6-10. Partial Shielding Installation

SECTION 7

SHIELDING ENCLOSURES, BONDING AND GROUNDING

Section 7

SHIELDING ENCLOSURES, BONDING AND GROUNDING

TABLE OF CONTENTS

Paragraph		Page
7.1	INTRODUCTION	7-1
7.2	SCOPE	7-1
7.3	SHIELDING ENCLOSURES	7-2
7.3.1	Magnetic Saturation of Materials	7-2
7.3.2	Shielding Effectiveness of Materials	7-2
7.3.2.1	Example Demonstrating Shielding Principles as Applied to Enclosure Requirements	7-5
7.3.2.2	Materials for Enclosures	7-5
7.3.3	Low-Carbon Steel Enclosures	7-6
7.3.4	Mumetal Enclosures	7-6
7.3.5	Annealing of Mumetal Enclosures	7-6
7.3.5.1	Preparation for Heat-Treatment of Mumetal	7-6
7.3.5.2	Instructions for Heat-Treatment of Mumetal	7-15
7.3.6	Finish	7-16
7.3.6.1	Finish at Enclosure-Cover Interface	7-16
7.4	RECOMMENDED WIRING PRACTICES FOR USE IN SHIELDING ENCLOSURES	7-16
7.5	METHOD FOR PLUGGING HOLE IN STEEL ENCLOSURE	7-20
7.6	TERMINATIONS AT HULL FITTINGS	7-20
7.6.1	90-Degree Capped Elbow Termination	7-20
7.6.2	Two-Branch Assembly Termination	7-20
7.6.3	Three-Branch Assembly Termination	7-20
7.6.4	Tailpiece for Hull-Fitting Termination	7-20
7.6.5	MX-7637/U Stuffing Tube Termination Adapter	7-20
7.7	REQUIREMENTS FOR THE USE OF ALUMINUM OR STEEL CONNECTORS AND ACCESSORIES	7-27
7.8	BONDING AND GROUNDING REQUIREMENTS	7-27

LIST OF ILLUSTRATIONS

Figure		Page
7-1	Skin Depth Versus Frequency	7-4
7-2	Terminal Box for Shielded Applications (Sheet 1 of 8)	7-7
7-2	Terminal Box for Shielded Applications (Sheet 2 of 8)	7-8
7-2	Terminal Box for Shielded Applications (Sheet 3 of 8)	7-9
7-2	Terminal Box for Shielded Applications (Sheet 4 of 8)	7-10
7-2	Terminal Box for Shielded Applications (Sheet 5 of 8)	7-11
7-2	Terminal Box for Shielded Applications (Sheet 6 of 8)	7-12
7-2	Terminal Box for Shielded Applications (Sheet 7 of 8)	7-13
7-2	Terminal Box for Shielded Applications (Sheet 8 of 8)	7-14
7-3	Wiring Practice for Minimizing Pickup Loop Areas Inside Shielding Enclosure	7-17

LIST OF ILLUSTRATIONS (Cont'd)

Figure		Page
7-4	Wiring Practice for Maintaining Spacing Between Conductors Inside Shielding Enclosure	7-18
7-5	Wiring Practice for Shielded Twisted Pairs Inside Shielding Enclosure	7-19
7-6	Hole Plug for Steel Enclosure	7-21
7-7	Components for 90-Degree Capped Elbow Termination	7-22
7-8	Components for Two-Branch Assembly Termination	7-23
7-9	Components for Three-Branch Assembly Termination	7-24
7-10	Tailpiece for Hull-Fitting Termination	7-25
7-11	Adapter for Stuffing-Tube Type MX-7637/U	7-25
7-12	Spacing Requirements of Section 6 for Aluminum or Steel Connectors and Backshells	7-27

Section 7

SHIELDING ENCLOSURES, BONDING AND GROUNDING

7.1 INTRODUCTION

This section covers the requirements for construction and application of metal enclosures, such as terminal boxes, junction boxes, and connector hardware, that are used to shield cable terminations and electrical components from external electromagnetic radiation. The boxes also serve to attenuate electromagnetic radiation produced by electrical components enclosed within the box.

In an installation where a terminal box (or junction box) is located in a cable run which is completely enclosed in shielding conduit, that box shall be considered an extension of the shielding conduit and shall be manufactured of a material and thickness which provides, as a minimum, the same shielding effectiveness as the shielding conduit.

7.2 SCOPE

This section contains details on the construction of shielding enclosures such as materials, shielding effectiveness, and annealing instructions. This section also covers installation procedures such as wiring practices and grounding requirements.

The shielding procedures in this section are limited primarily to enclosures in the below-decks shipboard environment, and are directed primarily toward the low-frequency portion of the spectrum. The reasons for this are:

a. Effective shielding against magnetic fields is more difficult to achieve at low frequencies than at high frequencies. The greater "skin depth" at low frequencies dictates a requirement for thicker material to obtain the necessary protection.

b. The bulk of below-deck EMI problems are related to the shipboard power system and occur at frequencies below 100 kHz.

c. EMI problems are more tractable at frequencies above 100 kHz.

This section does not cover shielding enclosures employed in the topside shipboard environment that require additional considerations. The two major considerations and requirements are:

a. A 360-degree bonding of the shielding conduit at the enclosure penetration must be installed to protect electrical and electronic circuits from electromagnetic radiation from transmitting antennas, lightning, and electromagnetic pulse (EMP).

b. The enclosures must be made weather tight to maintain EMC.

7.3 SHIELDING ENCLOSURES

Placing sensitive circuits in metal enclosures protects them from interference caused by electromagnetic fields. The type, thickness, and electromagnetic properties of the metal used in enclosure design determine the extent of such protection. Energy leakage through gaps and discontinuities in the enclosure reduce the amount of desired protection and must be minimized during design. Magnetic saturation of the shielding material can further reduce protection and must also be a design consideration. The following paragraphs provide guidance for the design and installation of effective shielding enclosures.

7.3.1 Magnetic Saturation of Materials

Shielding materials are often spoken of as magnetically hard or magnetically soft, indicating a low or high permeability characteristic respectively. The magnetizing force required for saturation is usually much greater for materials possessing low permeabilities. As the applied magnetizing force is increased beyond saturation, the shielding effectiveness of a material is reduced. This condition is to be avoided if at all possible.

The flexible shielding conduit described in section 3 and the mumetal enclosures discussed in this section can be considered magnetically soft. They saturate at a relatively low magnetizing force that is dependent upon the condition of the material. Rolled sheet and low carbon steel shielding materials are not quite as soft and possess much lower permeabilities than flexible conduit or mumetal and therefore require a much greater magnetizing force for saturation.

The magnetizing force, or field intensity, of the interference source to be shielded against is always a factor to be considered in shielding problems. The magnitude of the interference source should not exceed published values given for saturation of a particular material.

7.3.2 Shielding Effectiveness of Materials

The absorption loss (or penetration loss as it is sometimes called) is that loss due to the attenuation experienced by an alternating, tangential magnetic field as it penetrates the shielding material. Absorption loss is usually the dominant factor in the design of shielding enclosures and, as such, dictates selection of the type and thickness of the material necessary to provide adequate shielding effectiveness.

A changing magnetic field tangentially incident on a conducting surface causes current to flow in the material; the current, in turn, tends to reduce the field at increasing depths within the material. If the field is alternating, there is never time for the field to become completely established, and the higher the frequency the more the current will be concentrated near the surface of the material. This phenomenon is called "skin effect."

The depth within the conducting material, where current is reduced by a factor of e^{-1}, or by approximately 37 percent of its surface value, is referred to as one "skin depth," and is determined from

$$\delta = \frac{1}{\sqrt{\pi f \mu_m \sigma_m}} \text{ meters,} \tag{1}$$

where in mks units:

f = frequency in hertz
μ_m = permeability of material in henries/meter
s_m = conductivity of material in siemens/meter.

The absorption loss in dB for one "skin depth" is

$$A\ (dB) = 20 \log_{10} e^1 = 8.686\ dB\ . \tag{2}$$

For a shield of any thickness this becomes

$$A\ (dB) = 20 \log_{10} e^{t/\delta} = 8.686\ (t/\delta) dB\ , \tag{3}$$

where t = thickness of material in the same units as d.

For calculations where relative values of conductivity and permeability are used, equation (3) can be equated to

$$A\ (dB) = 3.34\ t\sqrt{f \mu_r \sigma_r}\ , \tag{4}$$

where relative values are:

$\mu_r = \frac{\mu_m}{\mu_o}$ = permeability of material relative to that of

(μ_O = 1.26 x 10^{-6} henries/meter)

$\sigma_r = \frac{\sigma_m}{\sigma_{cu}}$ = conductivity of material relative to that

(σ_{cu} = 5.8 x 10^7 siemens/meter).

Figure 7-1 is a plot of skin depth (equation 1) versus frequency for typical shielding materials and for the ratio of t/d equal to 1 (where d is given in inches). Although the permeability of ferrous materials is inversely related to frequency, it is plotted as a constant value in figure 7-1. As the number of "skin depths" increases with frequency, adequate shielding can usually be achieved despite this decrease in material permeability. If, however, the permeability of the material at the frequency of the interference is known, the absorption loss can be calculated using equation (3) or (4).

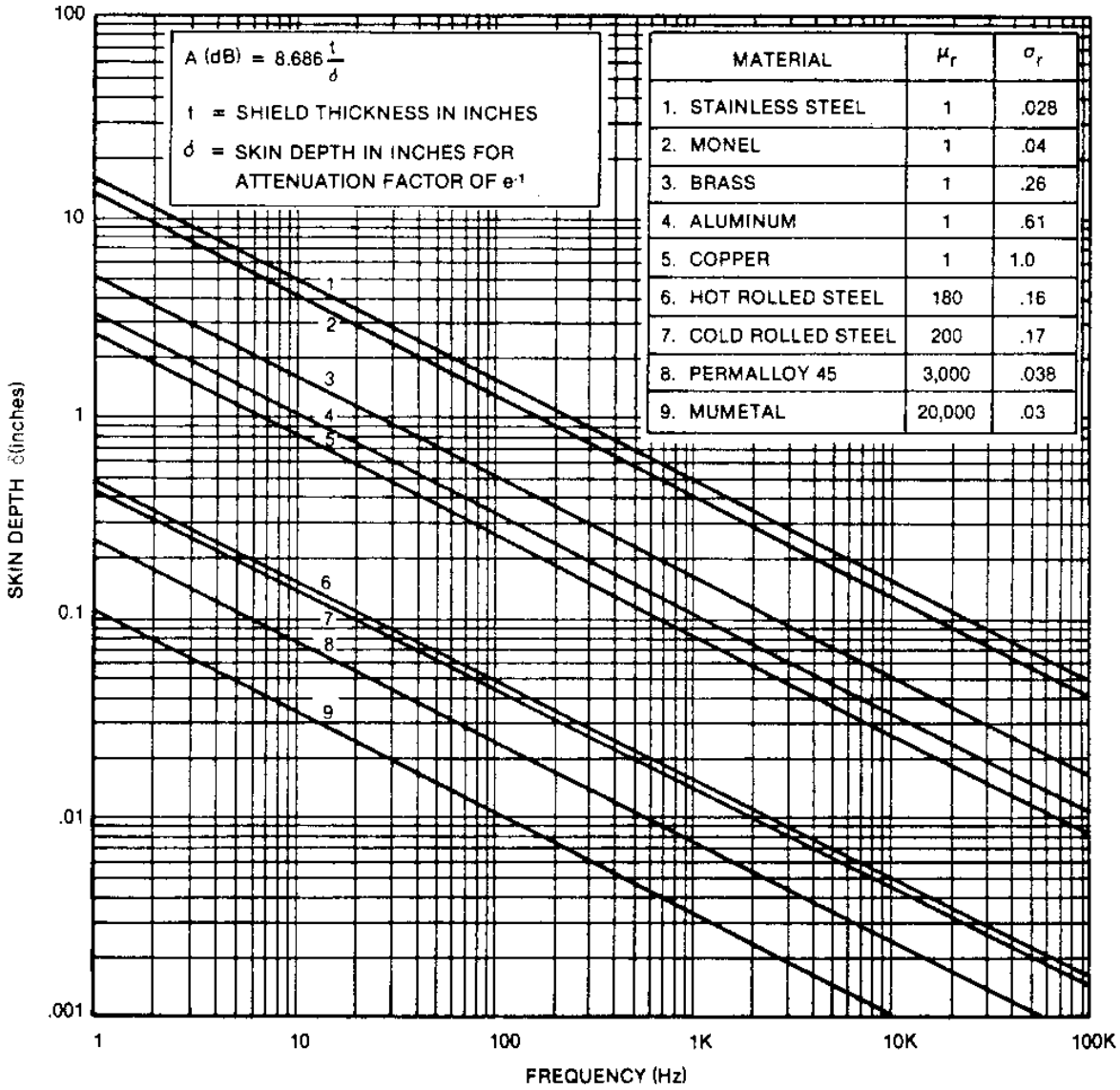

NOTES:

1. MONEL IS A NICKEL-COPER ALLOY (67% Ni; 30% Cu).
2. PERMALLOY 45 IS A NICKEL-IRON ALLOY (45% Ni; 55% Fe).
3. MUMETAL IS A NICKEL-COPPER ALLOY (76% Ni; 6% Cu).

Figure 7-1. Skin Depth Versus Frequency

7.3.2.1 Example Demonstrating Shielding Principles as Applied to Enclosure Requirements

The following example of an interference problem illustrates a typical requirement for a shielding enclosure.

A sonar system shows that interference is present in the signal pass-band. The interference is 40 dB above the equipment design performance sensitivity, seriously degrading operational capability. Tests show that external interference is magnetically induced into the system via a brass junction box having a wall thickness (t) of 11 gauge (0.120 inch).

From figure 7-1, at a frequency of 2 kHz, the skin depth (δ) for brass is 0.115 inch. From equation (3) of paragraph 7.3.2 the attenuation provided by the brass junction box is

$$A\ (dB) = 8.686\ X\left(\frac{0.120}{0.115}\right) = 9.06\ dB$$

A junction box made of some other material which provides an attenuation of 40 dB greater than that provided by the brass junction box is required for adequate shielding. Hot- or cold-rolled, 11-gauge sheet steel is readily available, and is of the minimum allowable thickness approved for construction of shielding enclosures.

From figure 7-1, at a frequency of 2 kHz, the skin depth (δ) for hot- or cold-rolled steel is approximately 0.010 inch. From equation (3) of paragraph 7.3.2 the attenuation provided by a steel junction box having a wall thickness of 11 gauge (0.120 inch) is

$$A\ (dB) = 8.686\ X\left(\frac{0.120}{0.010}\right) = 104\ dB$$

This steel junction box will provide more shielding than that required to protect the sonar circuits. The 104 dB of attenuation is in excess of the 9.06 dB provided by the brass junction box and the 40 dB of interference by the amount determined as

$$\text{Excess A (dB)} = 104\ dB - (9.06\ dB + 40\ dB) = 55\ dB\ .$$

7.3.2.2 Materials for Enclosures

A comparison of the shielding effectiveness in terms of "skin depth" of various ferrous and nonferrous metals is presented in figure 7-1. Note that stainless steel and monel are not effective shields for the frequencies plotted, and brass, aluminum, and copper are undesirable as shielding materials against 60-Hz and 400-Hz power frequencies. Permalloy 45 and mumetal are more effective as shields against low frequency magnetic fields than unannealed low-carbon steel of the same thickness. Other materials not shown in figure 7-1, such as Permalloy 78.5 (78.5% Ni, 21.5% Fe) and Hipernom (80% Ni, 4.2% Mo, 15% Fe) possess skin depth characteristics between the values shown for Permalloy 45 and mumetal. These materials may also be used for constructing shielding enclosures. However, the shielding effectiveness of these medium- and high-permeability alloys is affected by mechanical shock. If an enclosure made of one of these annealed metals is machined, dropped, or otherwise subjected to mechanical shock, the enclosure must be reannealed. Therefore, in light of the difficulty in assuring protection from the hazards of mechanical shock, the use of enclosures made from these materials is discouraged.

Of the shielding materials noted in figure 7-1, mumetal and low-carbon steel shall be used in ships. Of the two, low-carbon steel (hot- or cold- rolled) is preferred because it is not as shock-sensitive as mumetal.

7.3.3 Low-Carbon Steel Enclosures

Low-carbon steel enclosures shall be fabricated from either hot- or cold-rolled steel, in accordance with Federal Specification QQ-S-698. The thickness of the steel shall be a minimum of 11 gauge (0.1196 inch) using the manufacturers' standard gauge for sheet steel. Annealing of low-carbon steel enclosures is not required. A good example of a steel enclosure is presented in figure 7-2 (sheets 1 through 8) which is a copy of drawings 2630-102-01 and 2630-102-02 entitled "Terminal Box for Shielded Applications." This greatly reduced copy is included for reference purposes rather than for construction.

7.3.4 Mumetal Enclosures

Figure 7-1 shows that mumetal enclosures will provide greater shielding effectiveness than low-carbon steel enclosures of the same thickness. Mumetal enclosures can provide the same shielding effectiveness as low-carbon steel enclosures but with less metal thickness. The thickness of a typical mumetal enclosure is 0.062 inch for the box and 0.075 inch for the cover. The shielding effectiveness of mumetal is extremely sensitive to shock. If a mumetal enclosure which has been annealed is later formed, dropped, machined, or otherwise subjected to mechanical shock, the enclosure must be reannealed to restore its shielding effectiveness.

An approved design for mumetal terminal boxes can be obtained from BUSHIPS Drawing No. SSB(N)616-404-2091704, "Mumetal Connection and Pull Boxes; Assembly and Details."

7.3.5 Annealing of Mumetal Enclosures

To develop optimum magnetic properties, mumetal must be annealed after all fabricating operations have been completed. Contamination by oxygen, sulfur, or carbon must be prevented during the annealing cycle. In specific applications in which a part cannot be fully annealed due to physical reasons, a compromise treatment may be given. Less than full annealing, however, will obviously result in less than optimum magnetic properties. The method of annealing in a dry hydrogen atmosphere is presented in the following paragraphs.

7.3.5.1 Preparation for Heat-Treatment of Mumetal

a. Complete all mechanical operations (such as drilling, punching, grinding) prior to annealing.

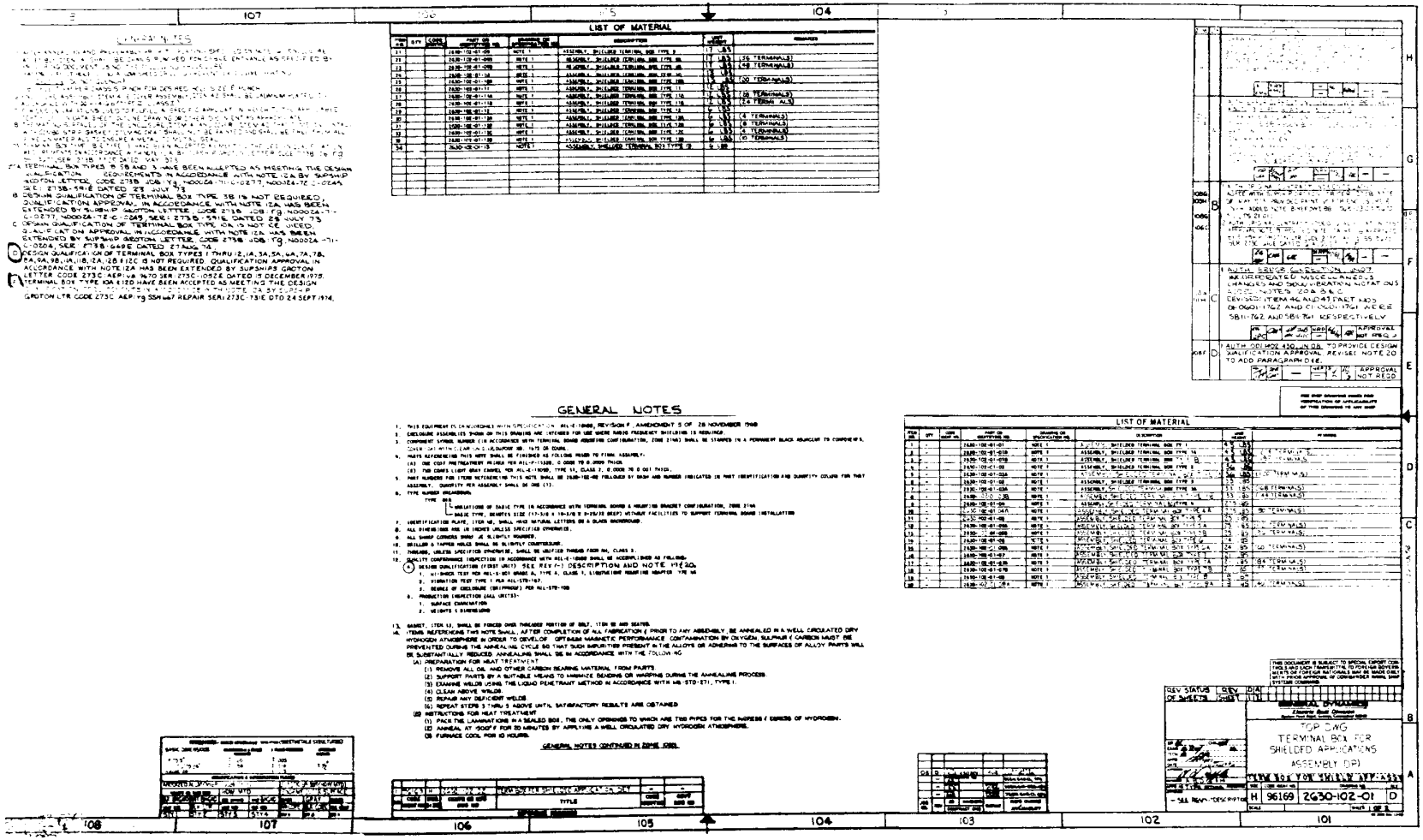
LIST OF MATERIAL
GENERAL NOTES
TOP CNO
TERMINAL BOX FOR
SHIELDED APPLICATIONS
ASSEMBLY (DP)
H 96169 2630-102-01 D

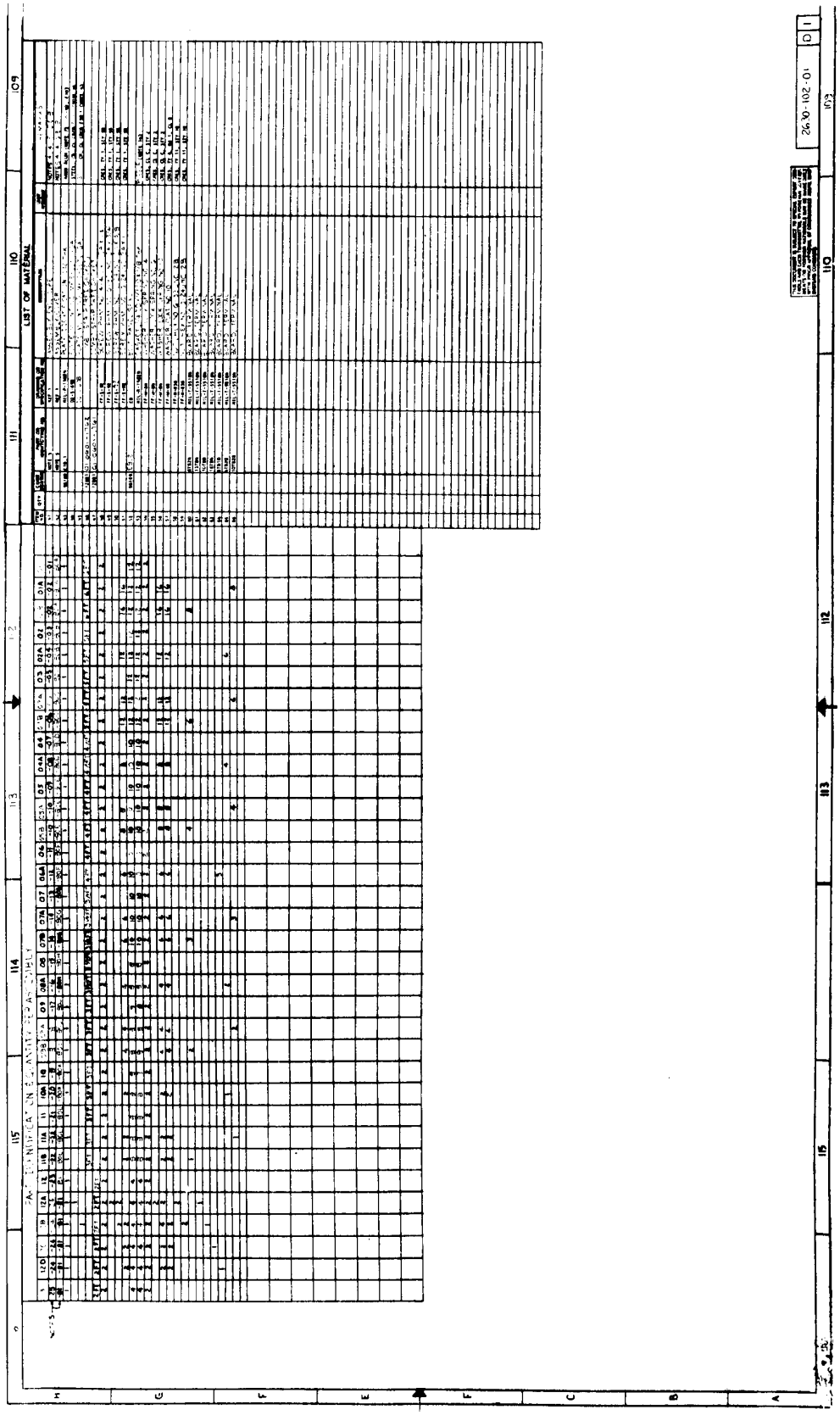

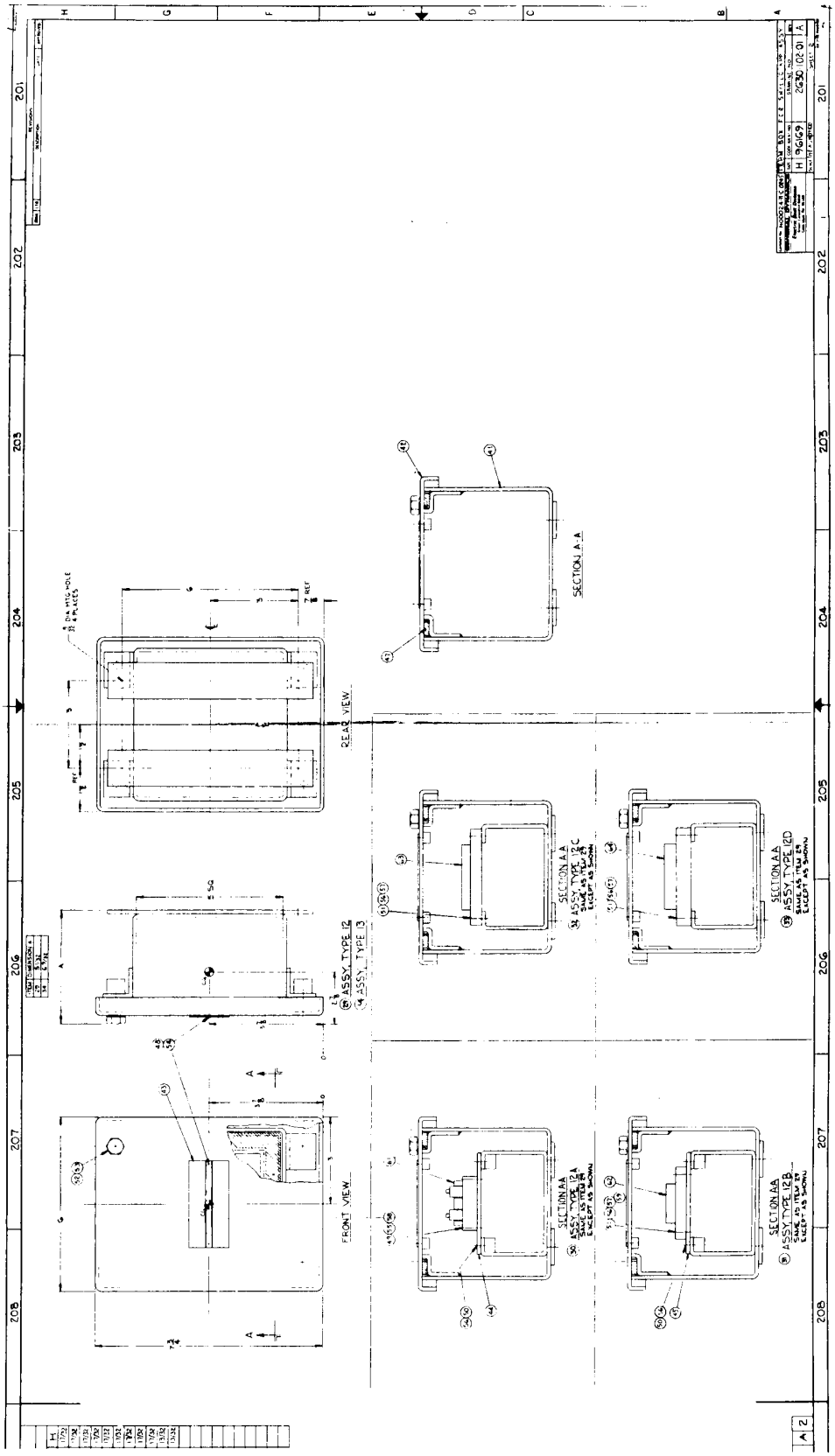
REAR VIEW
FRONT VIEW
SECTION A-A
SECTION AA
ASSY TYPE 12
ASSY TYPE 13
ASSY TYPE 12B
ASSY TYPE 12C
ASSY TYPE 12D

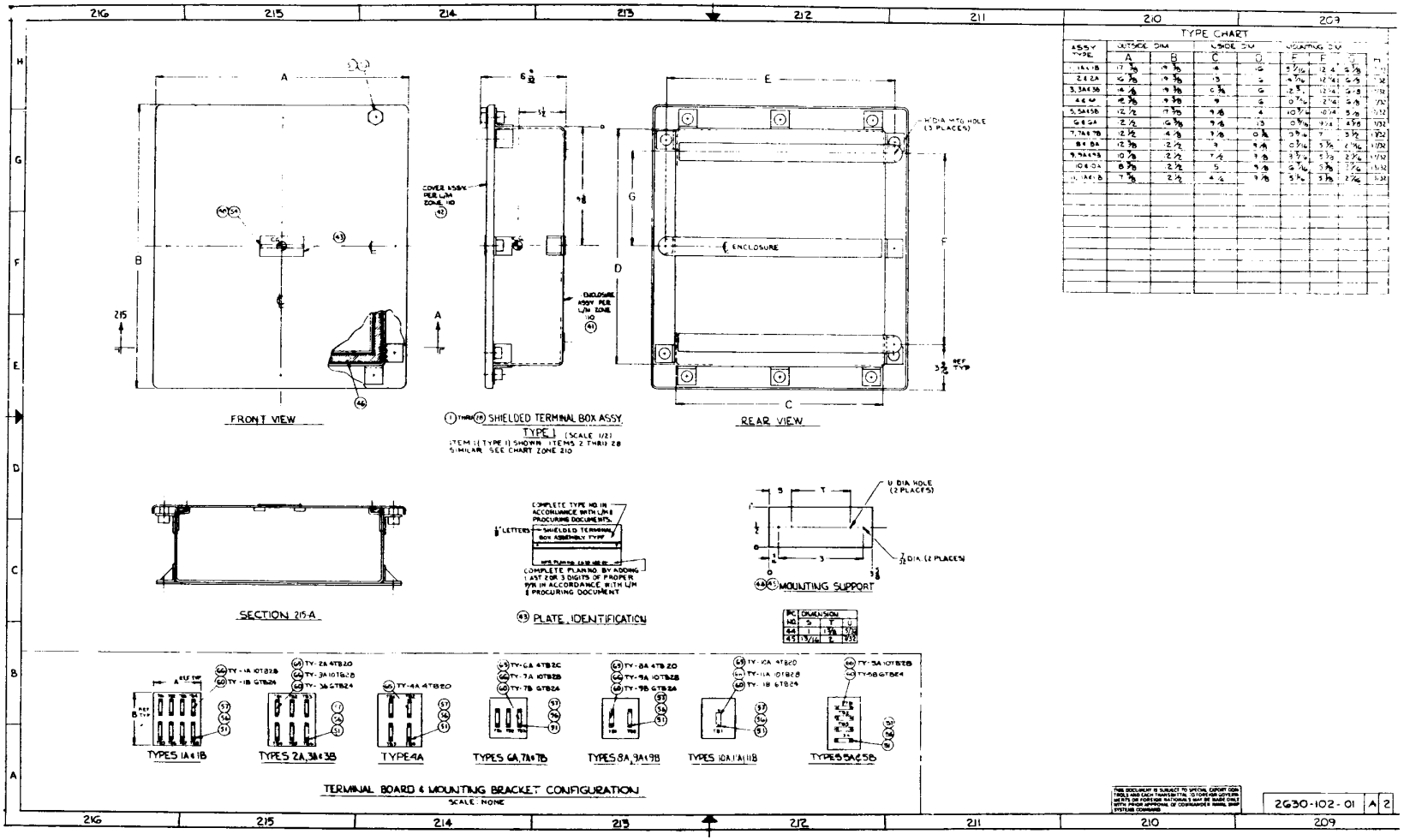

TYPE CHART

ASSY TYPE	OUTSIDE DIM A	OUTSIDE DIM B	INSIDE DIM C	INSIDE DIM D	MOUNTING DIM E	MOUNTING DIM F	MOUNTING DIM G	H
1, 1A & 1B	17 3/8	19 3/8	14	16	5 7/16	12 1/4	6 1/8	[illegible]
2 & 2A	16 3/8	19 3/8	13	16	4 7/16	12 1/4	6 1/8	[illegible]
3, 3A & 3B	14 1/8	19 3/8	6 3/8	16	12 5/16	12 1/4	6 1/8	[illegible]
4 & 4A	12 3/8	19 3/8	9	16	10 7/16	12 1/4	6 1/8	[illegible]
5, 5A & 5B	12 1/2	17 3/8	9 1/8	14	10 7/16	10 1/4	5 1/8	[illegible]
6 & 6A	12 1/2	16 3/8	9 1/8	13	10 7/16	9 1/4	4 7/8	[illegible]
7, 7A & 7B	12 1/2	14 1/8	9 1/8	10 3/8	9 7/16	7	3 1/2	[illegible]
8 & 8A	12 3/8	12 1/2	9	9 1/8	10 7/16	5 3/8	2 7/16	[illegible]
9, 9A & 9B	10 3/8	12 1/2	7 1/2	9 1/8	9 7/16	5 3/8	2 7/16	[illegible]
10 & 10A	8 3/8	12 1/2	5	9 1/8	6 7/16	5 3/8	2 7/16	[illegible]
11, 11A & 11B	7 3/8	12 1/2	4 1/4	9 1/8	5 7/16	5 3/8	2 7/16	[illegible]

PC NO.	DIMENSION S	T	U
44	1	1 3/8	5/32
45	13/16	2	1/32

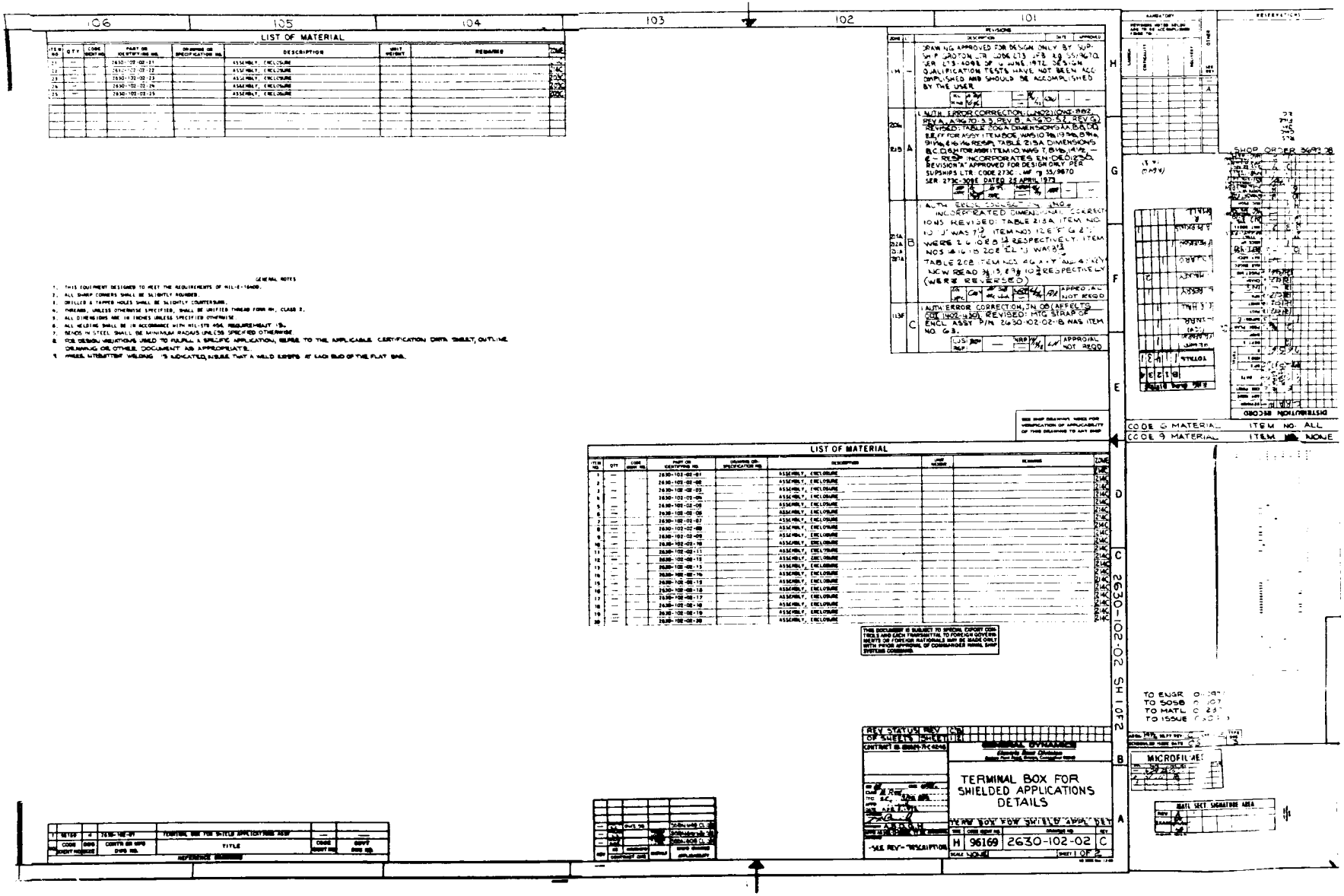

S9407-AB-HBK-010, Rev. 2

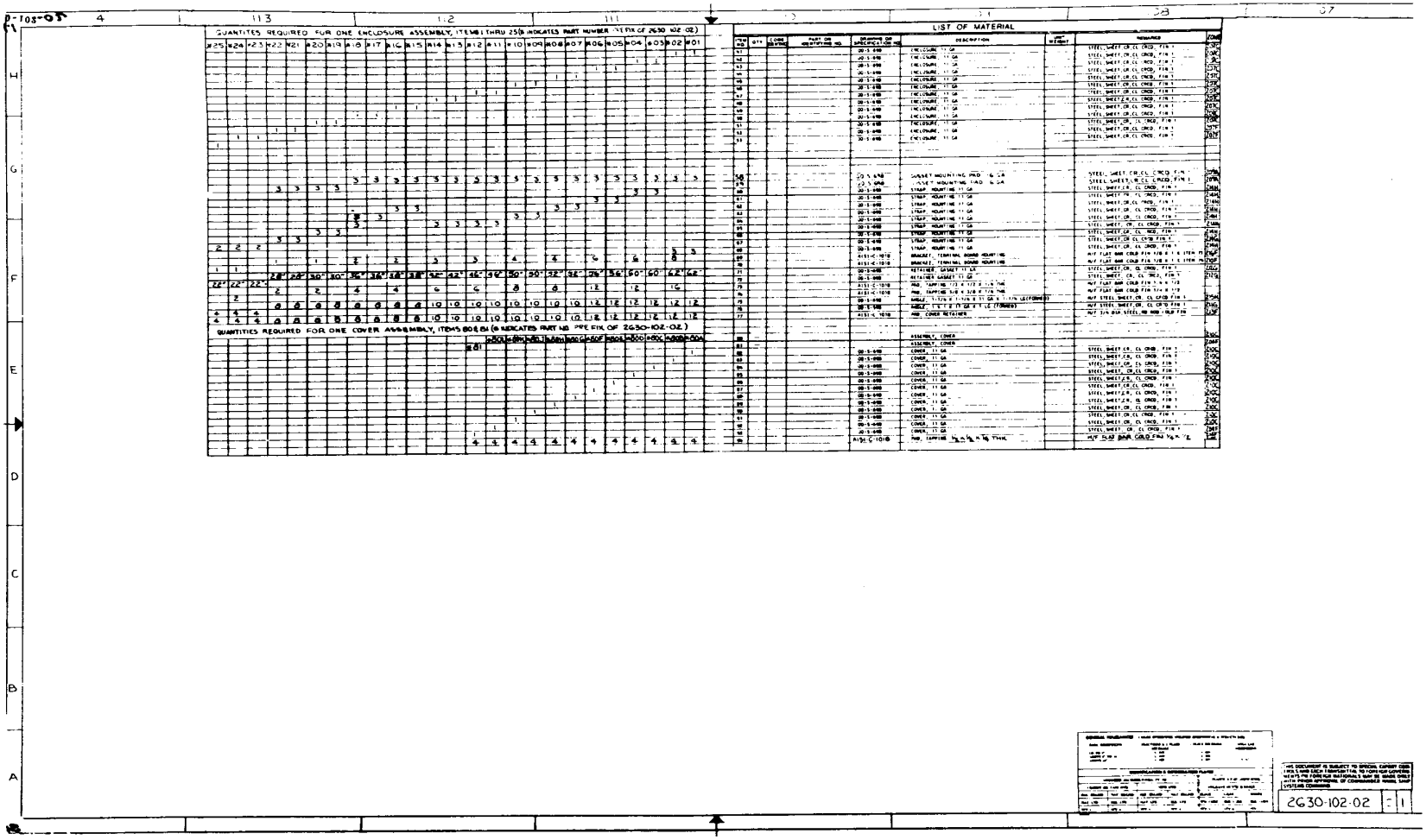
QUANTITIES REQUIRED FOR ONE ENCLOSURE ASSEMBLY, ITEMS 1 THRU 25 (# INDICATES PART NUMBER SUFFIX OF 2G30-102-02)
QUANTITIES REQUIRED FOR ONE COVER ASSEMBLY, ITEMS 80 & 81 (# INDICATES PART NO. SUFFIX OF 2G30-102-02)
LIST OF MATERIAL
2G30-102-02

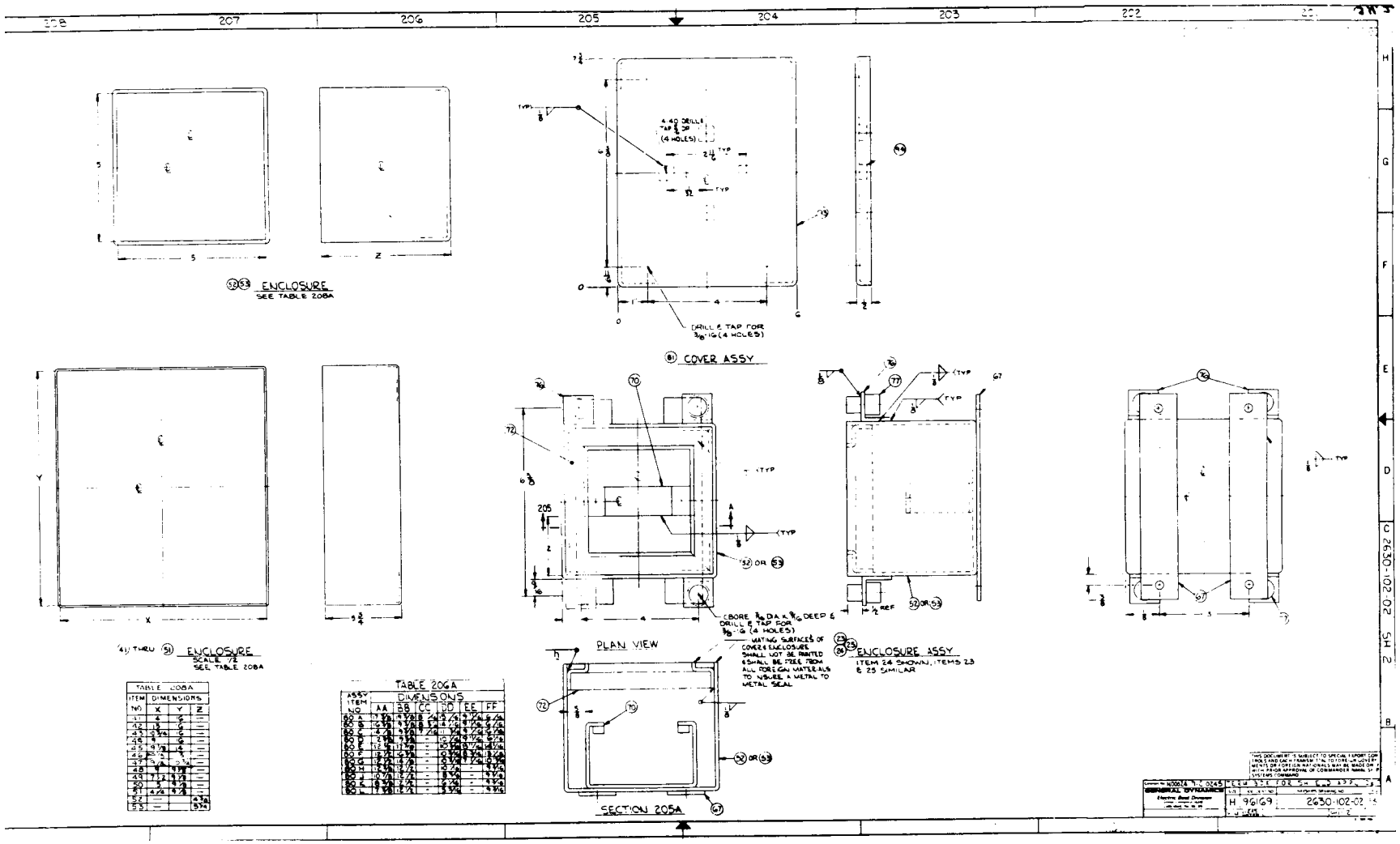
ENCLOSURE
SEE TABLE 208A
COVER ASSY
DRILL & TAP FOR 3/8-16 (4 HOLES)
ENCLOSURE
SCALE 1/2
SEE TABLE 208A
PLAN VIEW
SECTION 205A
ENCLOSURE ASSY
ITEM 24 SHOWN, ITEMS 23 & 25 SIMILAR
MATING SURFACES OF COVER & ENCLOSURE SHALL NOT BE PAINTED & SHALL BE FREE FROM ALL FOREIGN MATERIALS TO INSURE A METAL TO METAL SEAL
TABLE 208A
TABLE 206A
GENERAL DYNAMICS
H 96169
2630-102-02

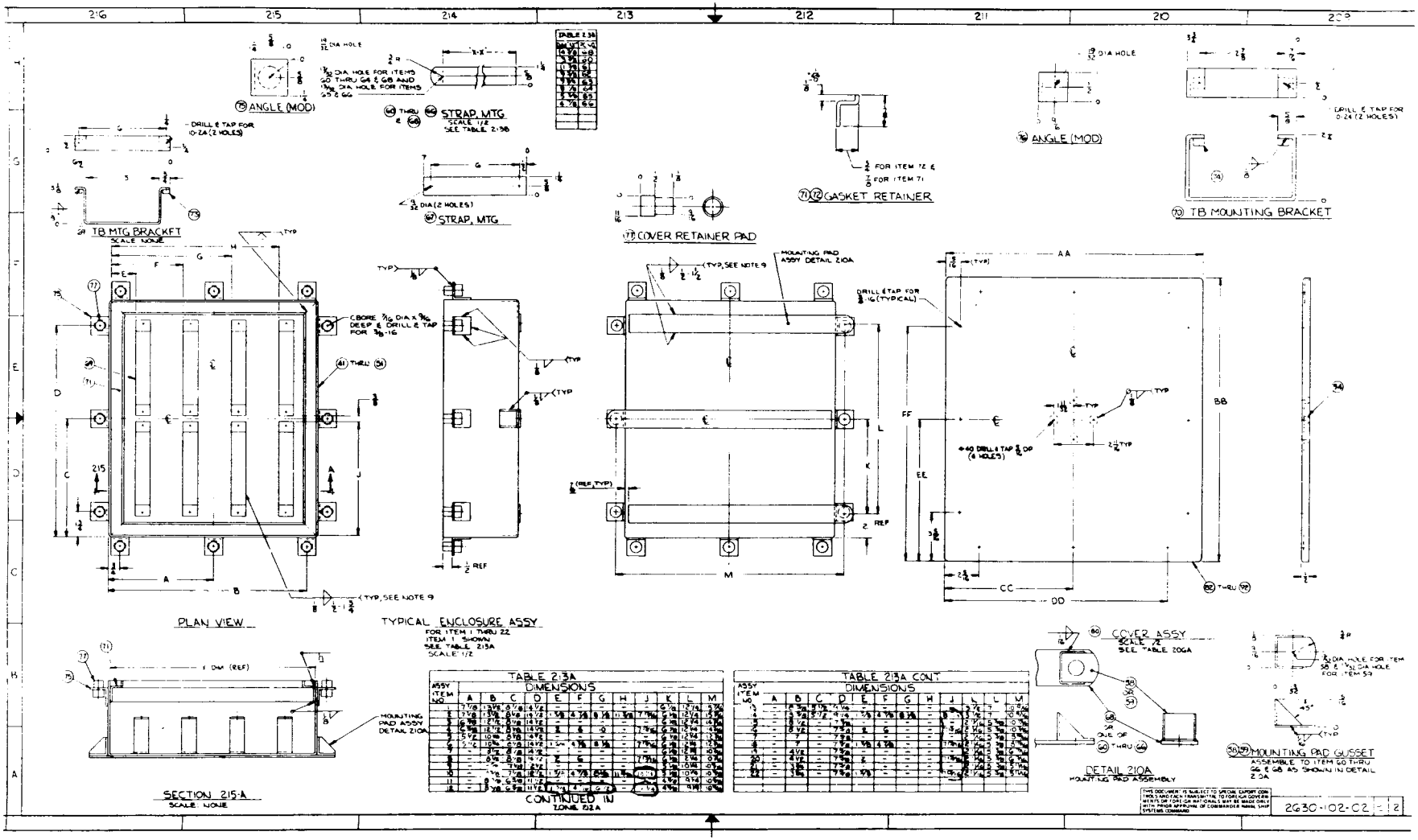
216
215
214
213
212
211
210
209
ANGLE (MOD)
STRAP, MTG
TB MTG BRACKET
SCALE NONE
GASKET RETAINER
COVER RETAINER PAD
TB MOUNTING BRACKET
PLAN VIEW
TYPICAL ENCLOSURE ASSY
FOR ITEM 1 THRU 22
ITEM 1 SHOWN
SEE TABLE 213A
SCALE 1/2
SECTION 215-A
SCALE NONE
COVER ASSY
SCALE 1/2
SEE TABLE 206A
DETAIL 210A
MOUNTING PAD ASSEMBLY
MOUNTING PAD GUSSET
ASSEMBLE TO ITEM 50 THRU 56 & 58 AS SHOWN IN DETAIL Z-3A
TABLE 213A
DIMENSIONS
TABLE 213A CONT
DIMENSIONS
CONTINUED IN ZONE 12A
2G30-102-C2

b. Completely remove oil, graphite, or other carbon- or sulfur-bearing material from parts prior to annealing.

c. Support the parts by suitable means to minimize warping or bending during the annealing process.

d. Separate the laminations by means of a pure calcined aluminum oxide powder or a suitable equivalent. (Annealing nickel-iron steels at temperatures above 1600° F, particularly in a hydrogen atmosphere, may cause sticking of the laminations and parts.)

7.3.5.2 Instructions for Heat-Treatment of Mumetal

a. Pack the laminations or parts in a completely welded box that has only two openings through which the hydrogen enters and leaves the box.

WARNING

As a safety precaution, it is necessary to purge with nitrogen before and after the annealing cycle.

b. Anneal only in pure dry hydrogen produced by the electrolytic process, passed over a copper or palladium catalyst, with the moisture removed by activated alumina, phosphorous pentoxide, or other drying agent so that the dew point of the gas is reduced to at least -60° F. The dry hydrogen atmosphere should be well circulated with a minimum flow rate of 10 times the volume of the retort per hour. (A significantly lower flow rate will not be adequate to completely purify the shielding material.)

c. Heat the charge to 2150° F at any convenient rate. After the charge is uniformly heated, hold it at 2150° F for 4 hours. Furnace cool at the rate of 200° F per hour to 600° F. Purge with nitrogen, after which the charge can be withdrawn from the furnace.

NOTE

Mumetal which is annealed at 1850° F for 4 hours is approximately 50 percent as effective as that annealed at the normal 2150° F temperature.

Annealing can be accomplished in atmospheres other than pure dry hydrogen, but with poorer results. For example, annealing in a mixture of 80 percent hydrogen and 20 percent nitrogen produces magnetic properties approximately 80 percent as effective as when annealing in pure dry hydrogen. Annealing in a vacuum develops properties between 50 percent and 75 percent as effective as those attained in a hydrogen atmosphere. Annealing in a pure nitrogen atmosphere develops magnetic properties approximately 50 percent as effective as those attained in a hydrogen atmosphere.

7.3.6 Finish

After annealing (where required), and prior to final assembly, the parts requiring painting shall be given one coat of pretreatment primer and two coats of enamel. In some cases a cadmium-plated finish may be required for the enclosure and cover assemblies.

7.3.6.1 Finish at Enclosure-Cover Interface

The mating surfaces of the enclosure and its cover which come in contact with the EMI gasket shall be cleaned to the bare metal, be free of all foreign materials, and remain unpainted to ensure a metal-to-metal seal to prevent leakage of magnetic flux.

Each time thereafter that the enclosure is opened, the contact surfaces should be inspected and, if necessary, cleaned to the bare metal before reattaching the cover.

If the enclosure is located in a corrosive environment, the contact surfaces between the enclosure and its cover shall be protected with a conductive finish, such as cadmium plating, or other conductive coating.

7.4 RECOMMENDED WIRING PRACTICES FOR USE IN SHIELDING ENCLOSURES

In order to optimize the EMI protection provided by shielding enclosures, particular attention should be paid to the layout of wiring inside the enclosures. The size of the loop area formed by a pair of conductors should be kept to a minimum by twisting the pair and by maintaining the twist as close to the terminals as practicable. In addition, the spacing between radiators and susceptors within the enclosure should be maintained as a minimum in accordance with section 6 wherever practicable. Figures 7-3, 7-4, and 7-5 illustrate various wiring practices.

The wiring practice shown in figure 7-3a is not recommended because it creates an unnecessarily large pickup loop area (shaded area) which increases circuit susceptibility. Figure 7-3b shows the recommended practice of keeping the conductor pairs short and tightly twisted to minimize the pickup loop area.

The wiring practice shown in figure 7-4a is not recommended because of the increase in cross-coupling caused by running susceptible (low-level) conductors too close to radiating (high-level) conductors. Figure 7-4b shows the recommended practice for obtaining maximum spacing (see section 6 for required spacing) between susceptible conductors and radiating conductors.

The wiring practice shown in figure 7-5a for a cable having shielded twisted pairs is not recommended because the arrangement creates large pickup loop areas. Figure 7-5b shows the recommended practice for terminating the shielded twisted pairs. The practice shown in figure 7-5b allows the shield for each twisted pair to be brought close to the terminals. A general rule for good wiring practice for shielded twisted pairs is to bring the shield as close as practicable to the end of the twisted pair and maintain the twist between pairs as close to the terminals as practicable.

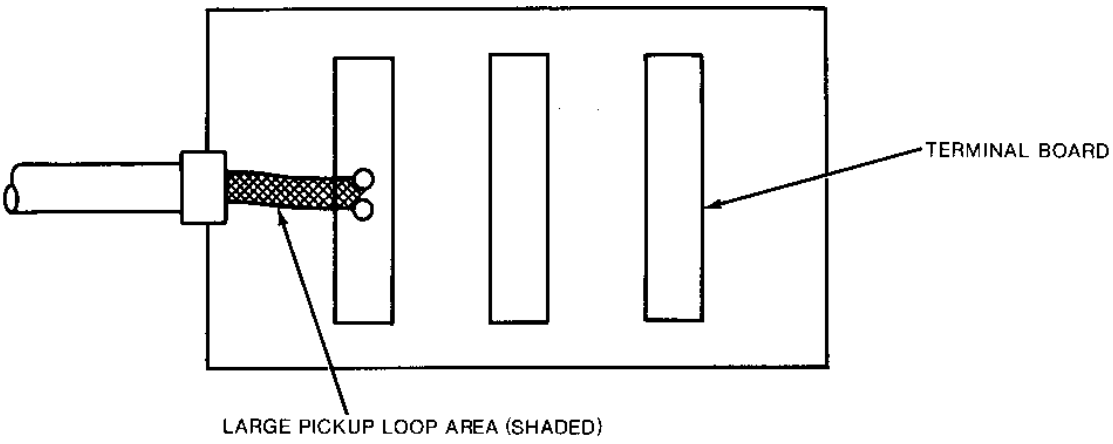

a. Not Recommended Practice: Untwisted Conductors Create Large Loop Area

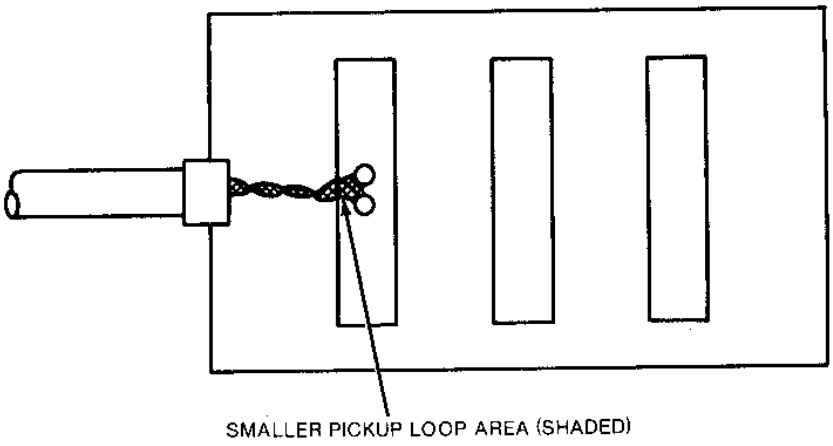

b. Recommended Practice: Twisted Conductors Minimize Loop Area

Figure 7-3. Wiring Practice for Minimizing Pickup Loop Areas Inside Shielding Enclosure

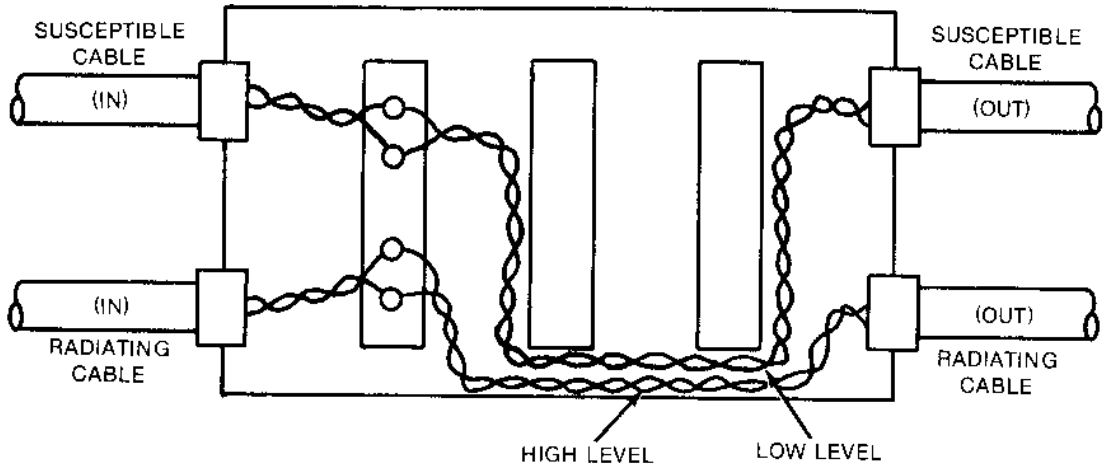

a. Not Recommended Practice: Susceptible (Low-Level) Conductors and Radiating (High-Level) Conductors Are Run Too Close Together

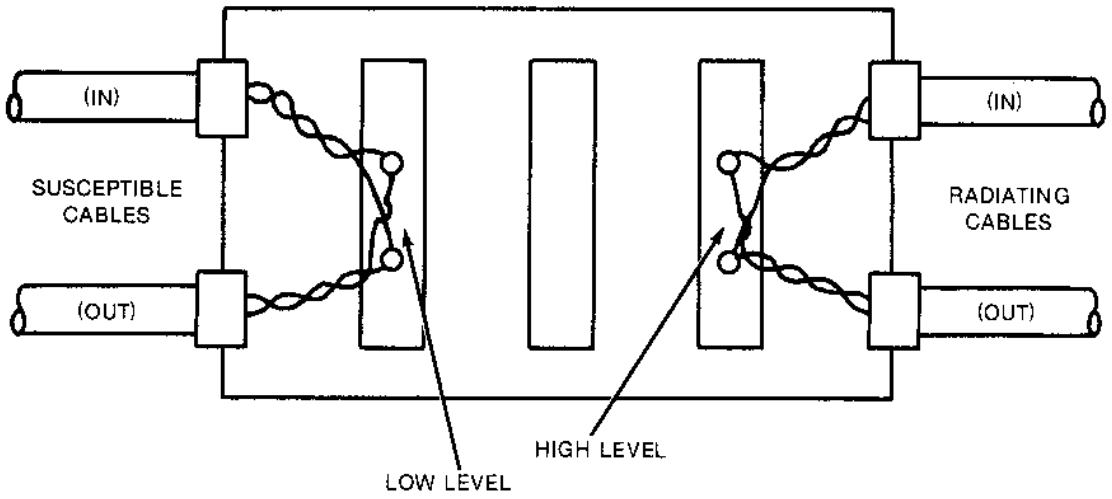

b. Recommended Practice: Spacing Between Susceptible Conductors and Radiating Conductors is Maintained

Figure 7-4. Wiring Practice for Minimizing Spacing Between Conductors Inside Shielding Enclosure

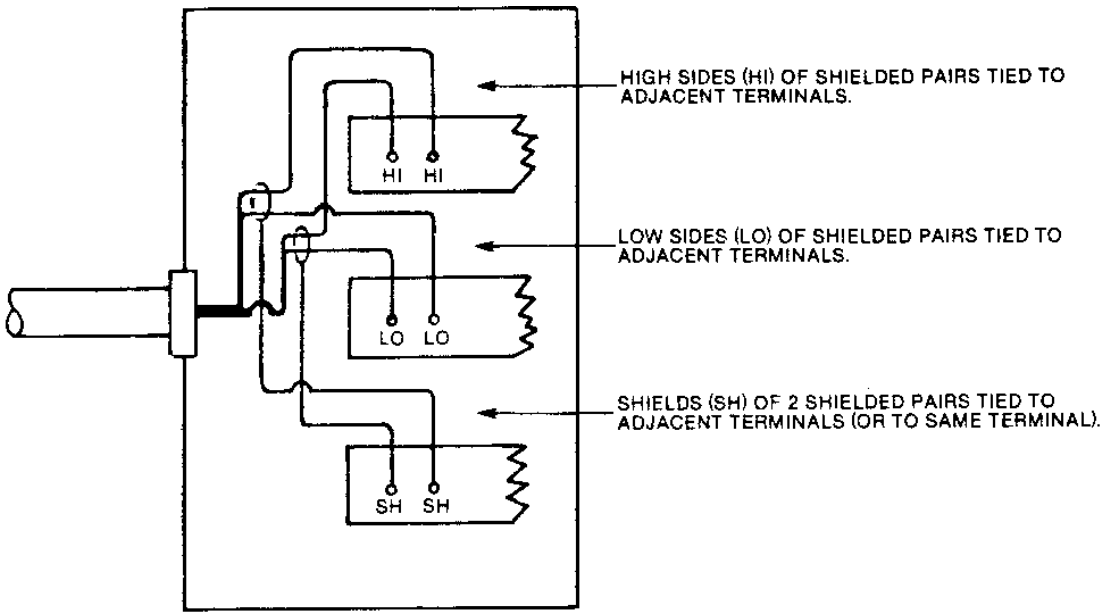

a. Not Recommended Practice: This Arrangement Creates Large Loop Areas

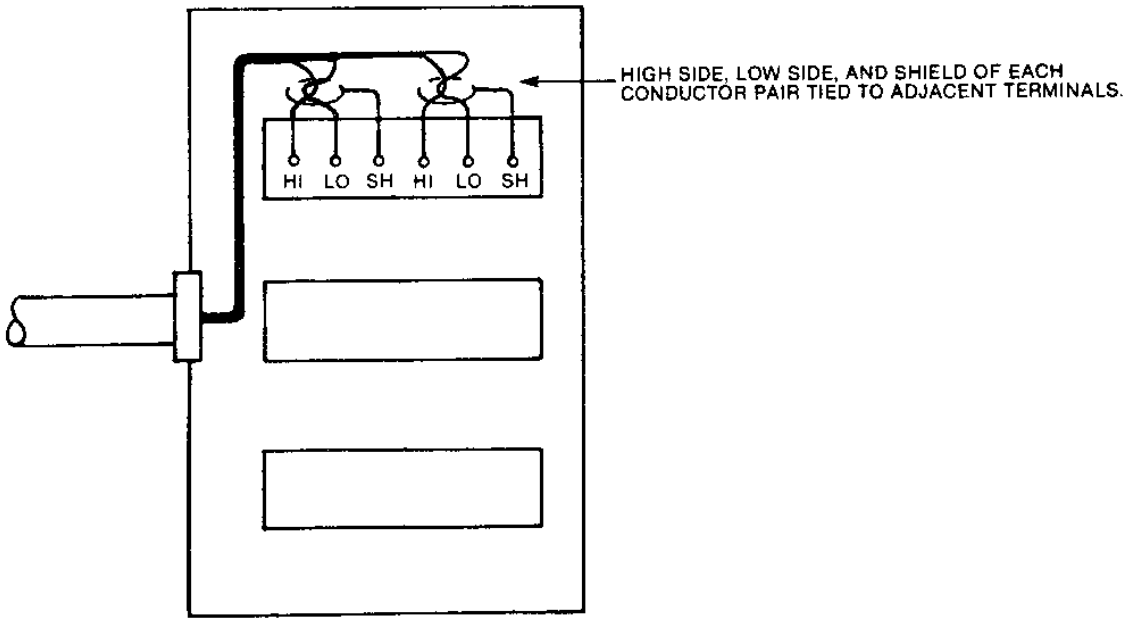

b. Recommended Practice: This Arrangement Minimizes Loop Areas

Figure 7-5. Wiring Practice for Shielded Twisted Pairs Inside Shielding Enclosure

7.5 METHOD FOR PLUGGING HOLE IN STEEL ENCLOSURE

Figure 7-6 illustrates a recommended method for plugging a hole in a steel enclosure when welding is not practicable. The gasket provides an environmental seal for the enclosure, and the retainer maintains the shielding integrity of the enclosure.

7.6 TERMINATIONS AT HULL FITTINGS

The following paragraphs describe the shielding hardware required to terminate flexible conduit at the inboard end of pressure proof hull fittings.

7.6.1 90-Degree Capped Elbow Termination

Figure 7-7 shows the components required for a 90-degree capped elbow termination at a hull fitting. The hull fittings is this figure are the type specified in MIL-C-24231 and are used to complete the path of multiconductor cables through the submarine pressure hull. Most of these hull fittings are supplied with 15-foot lengths of type B-16 wires (MIL-W-16878/1) attached to each hull fitting terminal. The B-16 wires are fed through the cap portion of the elbow. The conductors of the shielded cable are also run through the cap portion and connected to the B-16 wires. Once these conductors are joined they are stuffed in the elbow and the cap is screwed in place. Table I in figure 7-7 lists typical combinations of components required for the hull fittings used.

7.6.2 Two-Branch Assembly Termination

Figure 7-8 shows an assembly which can be used to shield and split the conductors associated with hull fitting symbol No. 516 into two branches in opposite directions. Electromagnetic shielding is maintained inside the assembly where the inboard conductors of the hull fitting are connected to the conductors of the shielded cables.

7.6.3 Three-Branch Assembly Termination

Figure 7-9 shows an assembly which can be used to shield and split the conductors associated with hull fitting symbol No. 516 into three branches. Electromagnetic shielding is maintained inside the assembly where the inboard conductors of the hull fitting are connected to the conductors of the shielded cables.

7.6.4 Tailpiece for Hull-Fitting Termination

Figure 7-10 shows a tailpiece used for terminating a 90-degree elbow, a two-branch assembly, or a three-branch assembly to a hull-fitting gland nut.

7.6.5 MX-7637/U Stuffing Tube Termination Adapter

The MX-7637/U stuffing tube is a pressure proof fitting which has been designed to pass an RG-293/U cable through the submarine pressure hull. The nut clamp of the MX-7637/U must be replaced by an adapter, figure 7-11, which couples the stuffing tube to a 3/4-inch flexible metal conduit. The end of the conduit which attaches to the adapter is terminated in a GR2129 ferrule and coupling nut of figure 4-11 (section 4).

PC	QTY	MATERIAL	DESCRIPTION
1	1	CONDUCTIVE ELASTOMER	EMI GASKET, FLAT, 1/16 THICK
2	1	LOW-CARBON STEEL	PLUG
3	1	LOW-CARBON STEEL	RETAINER
4	1	CRES	STUD, WELDING (FULLY THD) 1/4-20 NC-2
5	1	STEEL	LOCKWASHER, 1/4, FF-W-84, CL A, STY 2
6	1	STEEL	HEX NUT, 1/4-20 NC, MIL-B-857

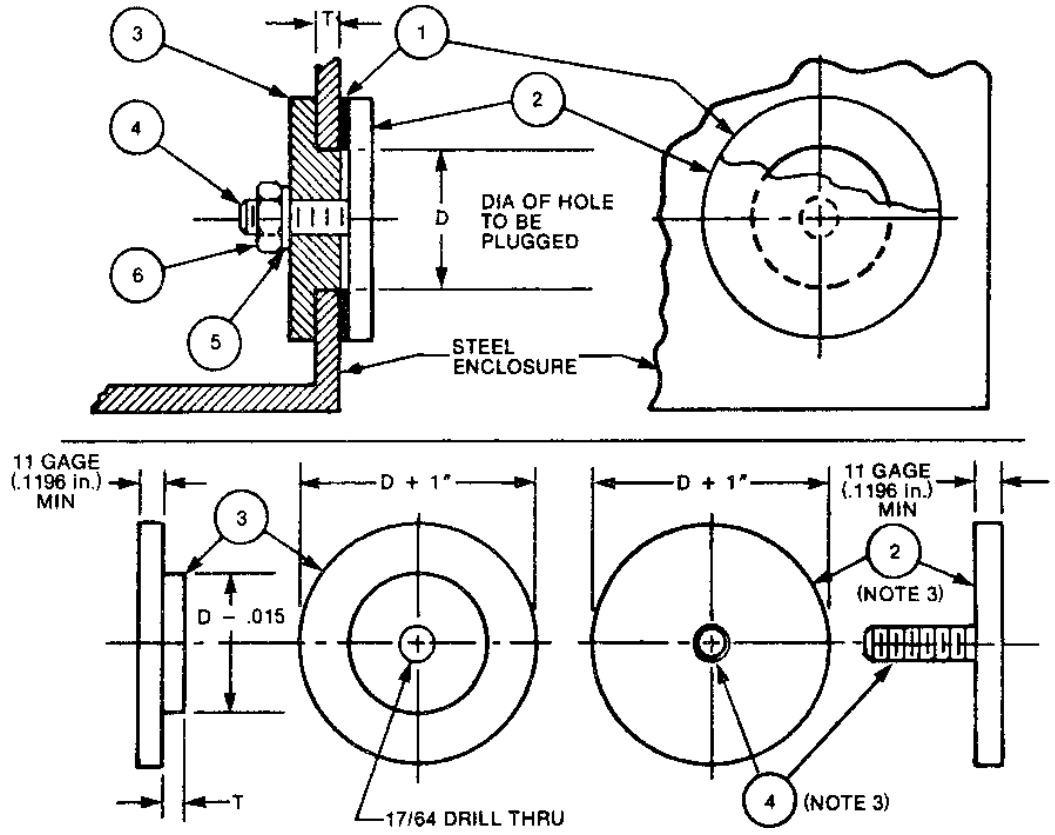

NOTES:

1. THIS METHOD SHALL BE USED ONLY WHEN IT IS NOT PRACTICABLE TO PLUG A HOLE BY WELDING.
2. REMOVE ALL PAINT, ANODIC FILM, GREASE, ETC. FROM INSIDE SURFACE OF ENCLOSURE AROUND AREA OF HOLE IN ORDER TO OBTAIN GOOD METAL-TO-METAL CONTACT WITH PC 3.
3. PC 2 AND PC 4 MAY BE WELDED OR BRAZED TOGETHER, OR FABRICATED FROM ONE PIECE OF LOW-CARBON STEEL.
4. FINISH SIMILAR TO ORIGINAL ENCLOSURE.
5. DIMENSIONS ARE IN INCHES.

Figure 7-6. Hole Plug for Steel Enclosure

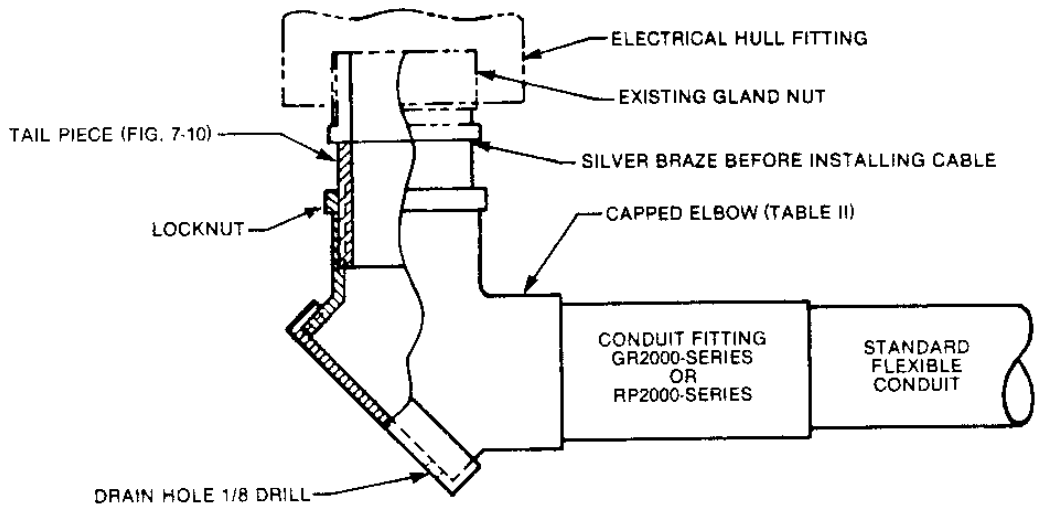

TABLE I TYPICAL COMBINATIONS OF COMPONENTS

HULL FITTING MIL-C-24231 SYMBOL NO.	TAIL PIECE DASH NO. (Fig. 7-10)	LOCKNUT	CAPPED ELBOW (Table II)	GR20000-SERIES TRANSITION FITTING	RP2000-SERIES END-FITTING (Note 1)	FLEXIBLE CONDUIT NOM. ID
517, 517.1 517.4, 517.5 517.7, 517.8 517.9	1	3/4	3/4	GR2123-4-3.5-EM06	RP2140-EM06, OR RP2141-EM06	3/4
517.2, 517.3 517.6, 516	2	3/4	3/4	GR2123-4-3.5-EM06	RP2140-EM06, OR RP2141-EM06	3/4
516	3	1	1	GR2123-6-3.5-EM08	RP2140-EM08, OR RP2141-EM08	1
516 (MOD)	3	1	1	GR2123-6-3.5-EM10		1-1/4
516 (MOD)	4	1-1/4	1-1/4	GR2123-7-3.5-EM10, OR GR2123-9-3.5-EM10	RP2140-EM10, OR RP2141-EM10	1-1/4

TABLE II SUGGESTED SOURCES FOR CAPPED ELBOWS

SIZE (Inches)	THOMAS & BETTS CO.		APPLETON ELECTRIC CO.		CROUSE-HINDS CO.	
	CAT. NO.	THREAD SIZE	CAT. NO.	THREAD SIZE	CAT. NO.	THREAD SIZE
3/4 1 1-1/4	1481 1482 1483	3/4 - 14 NPSM 1 - 11-1/2 NPSM 1-1/4 - 11-1/2 NPSM	ELBY-75 ELBY-100 ELBY-125	3/4 - 14 NPT 1 - 11-1/2 NPT 1-1/4 - 11-1/2 NPT	LBY-25 LBY-35 LBY-45	3/4 - 14 NPT 1 - 11-1/2 NPT 1-1/4 - 11-1/2 NPT

NOTES:

1. THE COMBINATION OF AN RP2100 END-FITTING AND AN RP2411, RP2430, OR RP2431 ADAPTER MAY BE USED AS AN OPTIONAL METHOD OF TERMINATING THE CONDUIT.
2. ALL DIMENSIONS ARE IN INCHES.

Figure 7-7. Components for 90-Degree Capped Elbow Termination

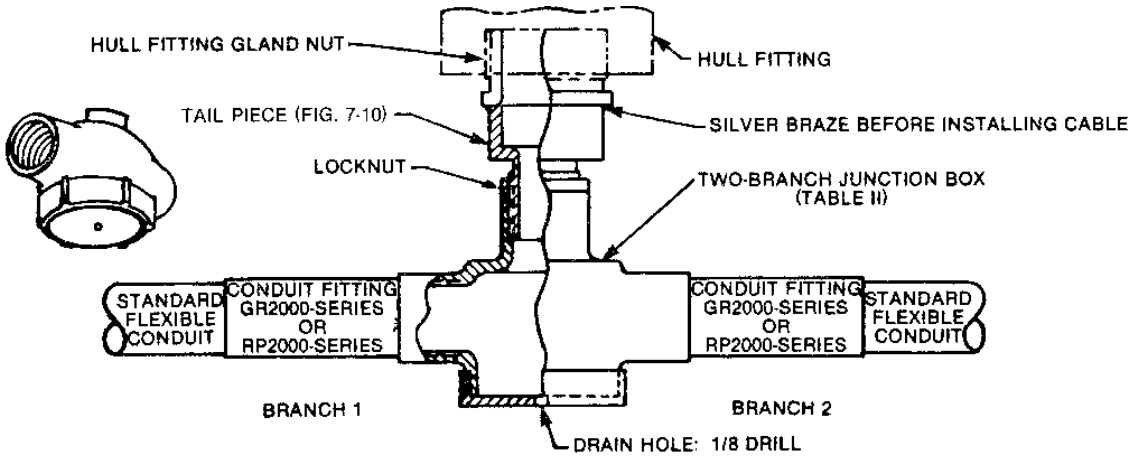

TABLE I TYPICAL COMBINATIONS OF COMPONENTS FOR EACH BRANCH

HULL FITTING MIL-C-24231/11 SYMBOL NO.	TAIL PIECE DASH NO. (Fig. 7-10)	LOCKNUT	TWO-BRANCH JUNCTION BOX (Table II)	GR2000-SERIES TRANSITION FITTING	RP2000-SERIES END-FITTING (Note 1)	FLEXIBLE CONDUIT NOM ID
516 516	2 3	3/4 1	3/4 1	GR2123-4-3.5-EM06 GR2123-6-3.5-EM08	RP2140-EM06 RP2140-EM08	3/4 1

TABLE II SUGGESTED SOURCES FOR TWO-BRANCH JUNCTION BOXES

SIZE	THREAD SIZE	APPLETON ELECTRIC CO. UNILET CAT. NO.	CROUSE-HINDS CO. CONDULET CAT. NO.
3/4 1	3/4 - 14 NPT 1 - 11-1/2 NPT	GRJCA75 GRJCA100	GUAD26-WOD GUAD36-WOD

NOTES:

1. THE COMBINATION OF AN RP2100 END-FITTING AND AN RP2430 ADAPTER MAY BE USED AS AN OPTIONAL METHOD OF TERMINATING THE CONDUIT.
2. ALL DIMENSIONS ARE IN INCHES.

Figure 7-8. Components for Two-Branch Assembly Termination

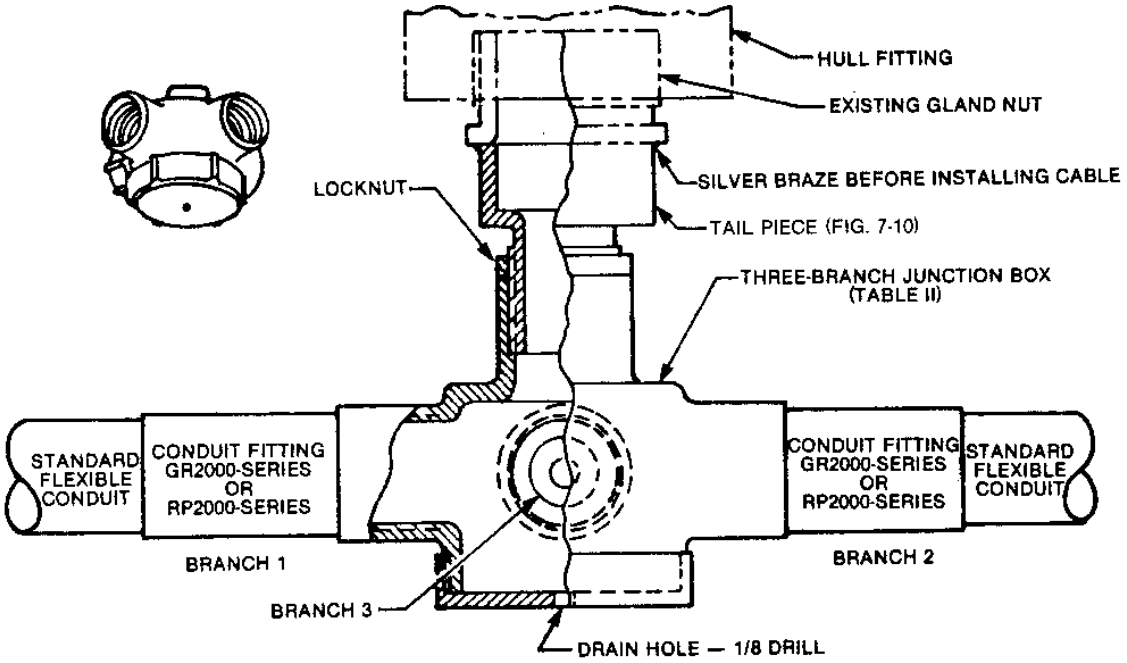

TABLE I TYPICAL COMBINATIONS OF COMPONENTS FOR EACH BRANCH

HULL FITTING MIL-C-24231/11 SYMBOL NO.	TAIL PIECE DASH NO. (Fig. 7-10)	LOCKNUT	THREE-BRANCH JUNCTION BOX (Table II)	GR2000-SERIES TRANSITION FITTING	RP2000-SERIES END-FITTING (Note 1)	FLEXIBLE CONDUIT NOM ID
516	2	3/4	3/4	GR2123-4-3.5-EM06	RP2140-EM06	3/4

TABLE II SUGGESTED SOURCES FOR THREE-BRANCH JUNCTION BOXES

SIZE	THREAD SIZE	APPLETON ELECTRIC CO. UNILET CAT. NO.	CROUSE-HINDS CO. CONDULET CAT. NO.
3/4	3/4 - 14 NPT	GRJTA 75	GUAW26-WOD

NOTES:

1. THE COMBINATION OF AN RP2100 END-FITTING AND AN RP2430 ADAPTER MAY BE USED AS AN OPTIONAL METHOD OF TERMINATING THE CONDUIT.
2. ALL DIMENSIONS ARE IN INCHES.

Figure 7-9. Components for Three-Branch Assembly Termination

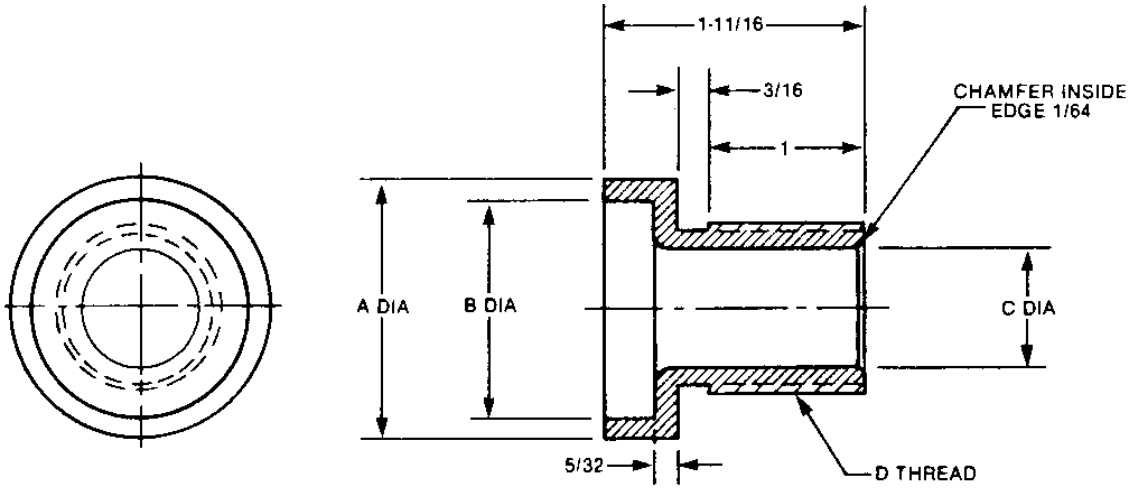

DASH NO.	A DIA	B DIA	C DIA	D THREAD
1	1-1/4	7/8	3/4	3/4 - 14 NPSM
2	1-5/8	1-5/16	3/4	3/4 - 14 NPSM
3	1-5/8	1-5/16	1	1 - 11-1/2 NPSM
4	1-5/8	1-5/16	1-3/16	1-1/4 - 11-1/2 NPSM

NOTES:

1. MATERIAL: LOW CARBON STEEL IN ACCORDANCE WITH FED-STD-66 WITH CADMIUM PLATING IN ACCORDANCE WITH QQ-P-416, TYPE I, CL3.
2. ALL DIMENSIONS ARE IN INCHES.

Figure 7-10. Tailpiece for Hull-Fitting Termination

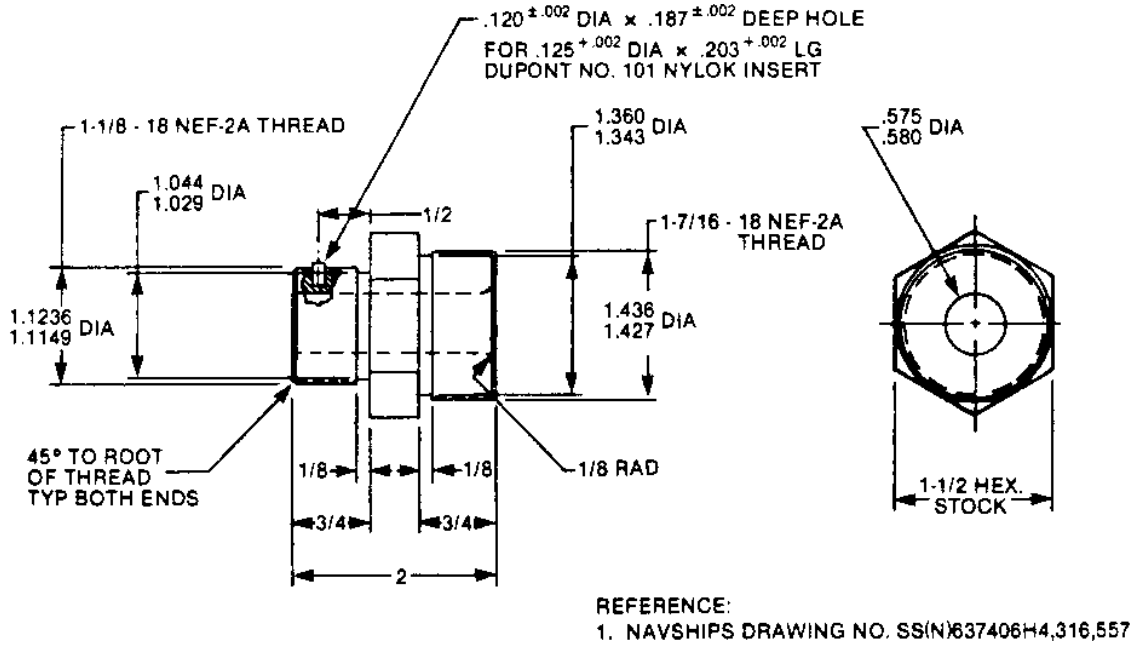

NOTES:

1. REMOVE ALL SHARP EDGES.
2. NAVAL BRASS QQ-B-637.

Figure 7-11. Adapter for Stuffing-Tube Type MX-7637/U

7.7 REQUIREMENTS FOR THE USE OF ALUMINUM OR STEEL CONNECTORS AND ACCESSORIES

To maintain the EMC protection obtained by a susceptible cable enclosed in a flexible shielding conduit, certain spacing requirements should be met before the use of aluminum connectors and its rear accessories (such as backshells) are considered. The requirements which allow the use of aluminum or dictate the use of low-carbon steel connectors and accessories are as follows:

Where the section 6 spacing requirements for an unshielded susceptible cable operating at frequencies below 100 kHz (i.e., section 6 cable categories S1, S2, S4, R5, R6, and R7) are met, an aluminum connector and its accessories may be used. (See figure 7-12a.)

Where the section 6 spacing requirements for the unshielded susceptible cable operating at frequencies below 100 kHz cannot be met, a low-carbon steel connector and its accessories should be used. (See figure 7-12b.)

It should be noted that connectors and backshells made of low-carbon steel are not readily available and may require a long delivery time. It should also be noted that some GR2000 series and RP2000 series adapters can be attached directly to connectors in place of backshells. Thus, in many cases, these adapters, which are made of low-carbon steel, can eliminate the need for a backshell (whether aluminum or steel).

7.8 BONDING AND GROUNDING REQUIREMENTS

Electronic equipment, equipment enclosures, shielding enclosures, and associated conduit shall be bonded to ground potential (ship's hull) as specified in MIL-STD-1310. See the paragraphs under GENERAL REQUIREMENTS and DETAILED REQUIREMENTS dealing with EMI reduction. For conduit grounding, see the paragraph on submarines.

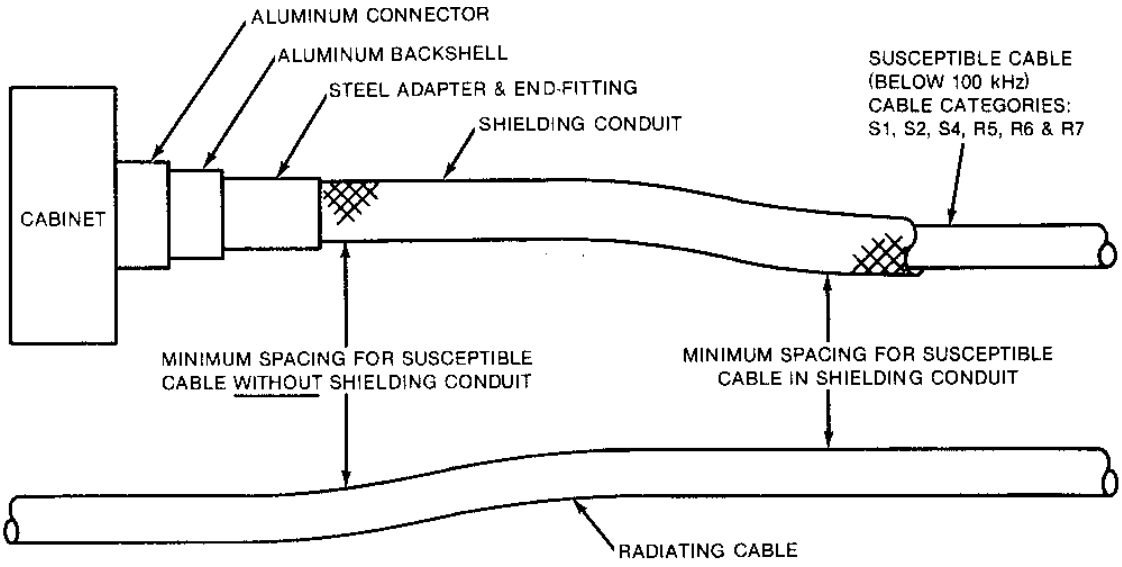

a. Spacing Where Aluminum Connectors and Backshells May Be Employed

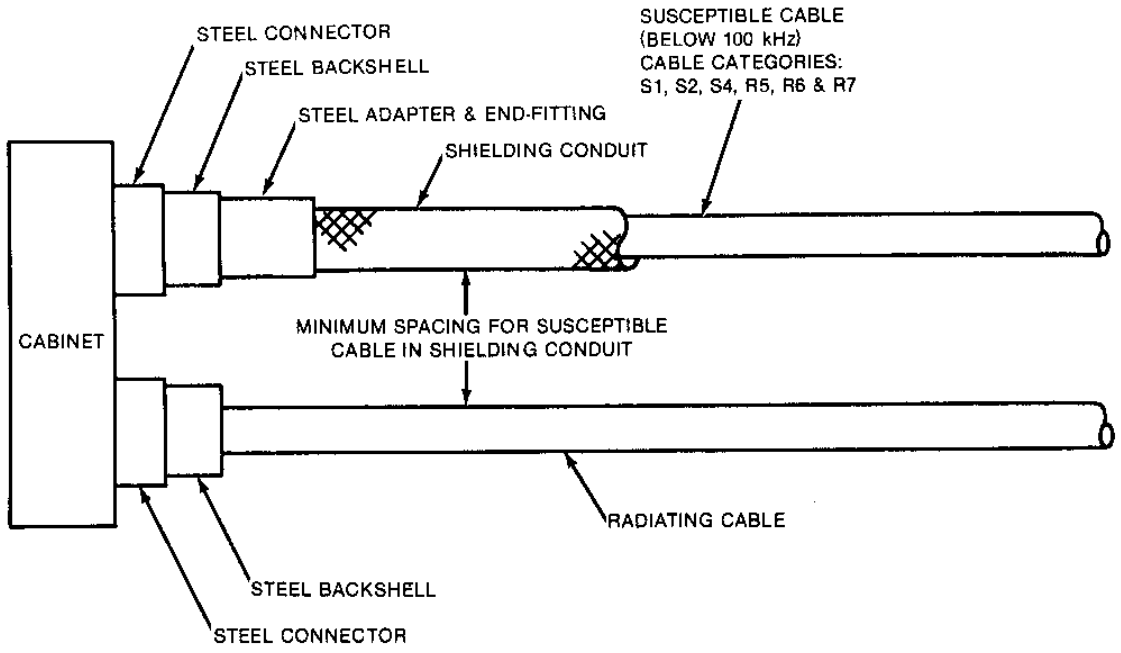

b. Spacing Where Low-Carbon Steel Connectors and Backshells Should Be Employed

Figure 7-12. Spacing Requirements of Section 6 for Aluminum or Steel Connectors and Backshells

APPENDIX A

SEPARATION AND SHIELDING REQUIREMENTS OF SECTION 5 OF NAVSEA 0967-LP-283-5010

APPENDIX A

SEPARATION AND SHIELDING REQUIREMENTS OF SECTION 5 OF NAVSEA 0967-LP-283-5010

TABLE OF CONTENTS

Paragraph		Page
A-1	INTRODUCTION	A-1

Paragraph (Section 5 Numbers)

5-1	BACKGROUND	A-2
5-2	SCOPE	A-2
5-3	CABLE SHIELDING, MARKING, AND SEPARATION REQUIREMENTS	A-3
5-3-1	Cable Marking	A-3
5-3-2	Cable Shielding and Separation Chart	A-3
5-3-3	Exceptions to Requirements for SLL Cables	A-5
5-3-4	General Cable Separation Requirements	A-6
5-3-5	Dual Purpose Cables	A-6

LIST OF ILLUSTRATIONS

Figure (Section 5 Number)		Page
5-1	Cable Chart Showing Separation and Shielding Requirements for Different Cable Categories	A-4

APPENDIX A

SEPARATION AND SHIELDING REQUIREMENTS OF SECTION 5 OF NAVSEA 0967-LP-283-5010

A-1 INTRODUCTION

The cable separation and shielding requirements of section 5 of NAVSEA 0967-LP-283-5010 are presented in this appendix for reference purposes and, specifically, as background information for utilizing appendix B of this handbook. Appendix B contains guidelines that deal with interface situations in which more than one set of cable spacing and shielding requirements are implemented on the same platform. For example, it addresses the requirements of section 5 of NAVSEA 0967-LP-283-5010 and the requirements of section 6 of either NAVSEA 0967-LP-283-5010 or S9407-AB-HBK-010 (including Revision 1).

The remaining pages of section 5 of NAVSEA 0967-LP-283-5010 are not included in this appendix because they concern hardware, such as the GR2000 series conduit fittings and hull fittings, which are described in other sections of this handbook.

SECTION 5

FLEXIBLE CONDUIT AND GENERAL GROUNDING REQUIREMENTS

5-1 BACKGROUND

As communications, sonar and other electronics systems on board submarines are improved through advancing technology, the systems generally become more complex, with higher power levels being generated - and radiated - from various circuits. Concurrently, more susceptible to electromagnetic interferences. Shielding techniques must improve in order that present and future equipments shall operate at their designed capabilities and not be degraded by the electromagnetic environment.

Until the present, cables on submarines have been shielded with seamless steel pipe made from low carbon steel and, where flexibility was required, Anaconda type AT2198 flexible metal conduit. These materials, and complete details for their application are described in sections 1 through 4 of this handbook

A material at greatly improved shielding capability (at low field intensities) over low carbon steel is an iron alloy containing a high percentage of nickel. It has a high initial magnetic permeability, a desirable characteristic for shielding against radiated magnetic fields of low intensity. A number of manufacturers are now fabricating flexible conduit from this high permeability material, and this is the type of conduit which the Navy Underwater Sound Laboratory has tested, and which the Naval Ship Engineering Center (NAVSEC) has approved for use on new construction submarines.

5-2 SCOPE

This section applies to new submarine design and construction. It provides:

a. Cable shielding and separation requirements

b. Bonding and grounding procedures

c. Details of use of transition fittings to connect flexible conduit to various hull fitting and bulkhead fittings

d. Specifications for flexible metal conduit, with a listing of qualified suppliers and their approved sizes and types of conduit. (See appendix 1)

e. Specifications for transition and accessory fittings, with a listing of drawings of such fittings and sources of supply. (See appendix 2)

5-3 CABLE SHIELDING, MARKING, AND SEPARATION REQUIREMENTS

5-3-1 Cable Marking

Cable identification tags shall be attached to all cables to indicate the appropriate cable category designation and these cables shall be enclosed in electromagnetic shielding or separate in accordance with the requirements specified in this section. Separation distance specified shall be measured between the outer sheathes of the cables or between the external electromagnetic shields. Cables enclosed in flexible metal conduit shall be identified by using the standard electronic cable designator including the shielded cable category mark on the conduit surrounding the cable.

EXAMPLES: 3R-RA28, RG-264/U (XLL)
R-SL57, 2SA-8 (SLL)
2R-SM5, RG-28 (LL)

5-3-2 Cable Shielding and Separation Chart

The chart in figure 5-1 specifies the requirement for shielding and separation of cables used for submarine electronic systems installations. The chart legend defines the various symbols used.

To use the chart, determine the category of the cables for which shielding or separation information is required. As an example, it has been determined that two cables being installed in a cable run fall in the LL and XLL category. To determine shielding requirements:

a. Enter the chart on the left at line F(LL), move to the right to column 4(XLL). The block at the intersection of line F, column 4 is

b. Refer to the chart legend to interpret the meaning of this block.

c. The heavy circle surrounding the designator XLL specifies that the cable in the XLL category must be shielded in high permeability flexible metal conduit. Since there are no lines or arrowheads between the two cable category designators, the chart legend indicates that the two cables are compatible and no addition shielding or separation is required.

As another example, consider two cables in the VHL and XLL category. To determine shielding requirements:

a. Enter the chart on the left at line B(VHL), move to right to column 4(XLL).

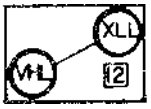

b. Refer to the chart legend to interpret the meaning of this block.

c. The line between the two designators in the block indicates that the cables are not compatible and both require shielding and separation.

d. The heavy circles surrounding each of the designators specify that both cables must be shielded in high permeability flexible metal conduit.

e. The number 12 enclosed in a square indicates that besides the use of flexible conduit the two cable runs enclosed in metal conduit must have a minimum separation of 12 inches.

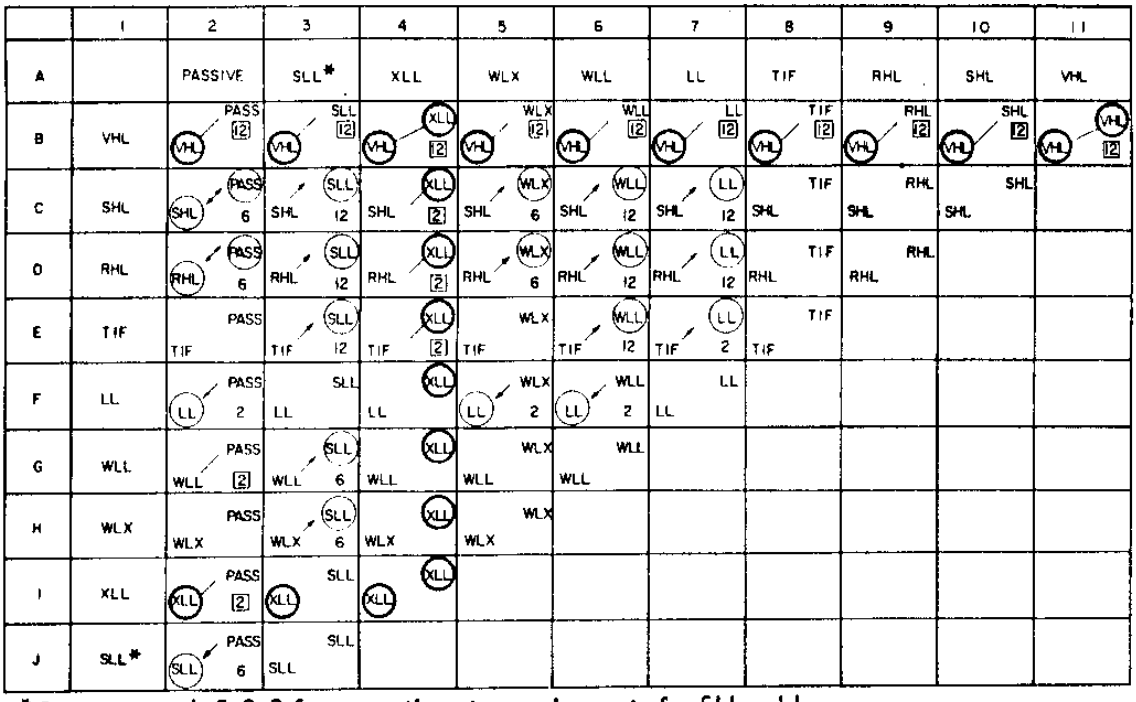

* See paragraph 5-3-3 for exceptions to requirements for SLL cables.

CABLE CATEGORY DESIGNATIONS

DES	CABLE CATEGORY
VHL	ACTIVE HIGH-LEVEL RADAR MODULATOR OR PULSE CABLES AND HIGH-POWER RADIO OR SONAR TRANSMITTING CABLES
SHL	SONAR PROJECTOR TRANSMITTING CABLES
RHL	RADIO TRANSMITTING CABLES
LL	LOW LEVEL RADIO AND SONAR RECEIVING CABLES ABOVE 100 kHz. (NOTE THAT LOW LEVEL HERE APPLIES TO CABLES CARRYING SIGNALS ABOVE 100 kHz TO SEPARATE THESE CABLES FROM RADIO LOW LEVEL CABLES (XLL) CARRYING SIGNALS BELOW 100 kHz.)
XLL	RADIO AND NAVIGATION RECEIVING CABLES 100 kHz AND BELOW
SLL	SONAR LOW LEVEL RECEIVING CABLES BELOW 100 kHz
TIF	RADAR IFF TRANSCEIVER SIGNAL CABLES
WLL	FBM WEAPONS SYSTEM AND SUPPORT SYSTEM DATA TRANSMISSION CABLES
WLX	FBM MISSILE FUNCTION AND GUIDANCE POWER CABLES
PASSIVE	THIS INCLUDES CABLES NOT SPECIFICALLY LISTED UNDER ACTIVE AND SUSCEPTIBLE, SUCH AS INTERIOR COMMUNICATION, FIRE CONTROL, WEAPON CONTROL (EXCEPT FBM WEAPON CONTROL SUBSYSTEM DATA TRANSMISSION CABLES), POWER AND LIGHT CABLES, AND ALL CONTROL CABLES FOR ELECTRICAL SYSTEMS.

NOTE

THE WORD "PASSIVE" MAY BE MISLEADING UNLESS THE TERMINOLOGY IS THOROUGHLY UNDERSTOOD. PASSIVE AS USED HEREIN DOES NOT MEAN "INACTIVE." THE PASSIVE CATEGORY, BY THE DEFINITION ABOVE, COULD EVEN INCLUDE A CABLE CARRYING A HEAVY CURRENT WHICH IS A VERY STRONG INTERFERENCE SOURCE.

CHART LEGEND	
○	SHIELD THIS CABLE IN HIGH PERMEABILITY FLEXIBLE METAL CONDUIT WITHOUT EXCEPTION
◯	SHIELD THIS CABLE IN HIGH PERMEABILITY FLEXIBLE METAL CONDUIT IF MINIMUM SEPARATION CANNOT BE MAINTAINED.
↗	ARROW INDICATES CABLE TO BE SHIELDED IF MINIMUM SEPARATION CANNOT BE MAINTAINED
↙	INDICATES EITHER CABLE MAY BE SHIELDED IF MINIMUM SEPARATION CANNOT BE MAINTAINED
/	LINE WITHOUT ARROWHEADS INDICATES CABLES NOT COMPATIBLE AND REQUIRE SHIELDING AND SEPARATION AS INDICATED
	NO LINE BETWEEN TWO CATEGORIES INDICATES CABLES ARE COMPATIBLE AND DO NOT REQUIRE ADDITIONAL SHIELDING OR SEPARATION
12	NUMBER INDICATES THE MINIMUM SEPARATION IN INCHES ALLOWED WITHOUT SHIELDING
[2]	NUMBER IN BOX INDICATES THE MINIMUM SEPARATION IN INCHES ALLOWED WITHOUT EXCEPTION

FIGURE 5-1. Cable Chart Showing Separation and Shielding Requirements for Different Cable Categories

As a third example, consider two cables in the TIF and WLL categories. To determine shielding requirements:

a. Enter the chart at the left at line E (TIF). Move to the right to column 6(WLL).

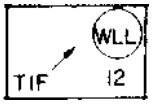

b. Refer to chart legend to interpret the meaning of this block.

c. The arrow pointing toward the thin circle surrounding the WLL category designator indicates the WLL category cable shall be shielded in flexible metal conduit if the minimum separation of 12 inches, specified in the lower right-hand corner cannot be maintained.

d. Also, the 12 in the lower right-hand corner, according to the legend, indicates that if the 12-inch separation in the cable run can be maintained, no shielding is required for either cable.

5-3-3 Exceptions to Requirements for SLL Cables

a. Installation of AN/BQS-6B, AN/BQS-13 sonar receiving cables below 100 kHz (SLL) and sonar projector transmitting cables (SHL) in the same cableway is permitted without shielding or separation provided:

(1) No other system sonar projector transmitting cables (SHL) are located within the cableway throughout the entire run.

(2) The AN/BQS-6B and AN/BQS-13 cableways are located at least 6 inches from all other passive electrical devices and 18 inches from all other sonar projector transmitting cables (SHL) throughout the entire run between the elliptical bulkhead and the equipment cabinet in the EES space.

(3) Separation between preamplifier input cables and the transmitting cables located within the sphere shall be at least 6 inches or installed in approved shielding.

b. Installation of sonar projector transmitting cables (SHL) in shielding (vice sonar receiving cables below 100 kHz (SLL) is permitted in the reactor compartment.

c. A minimum separation distance of two inches shall be maintained between PASSIVE cables and SLL shielded cables.

d. The following requirements apply to the separation of shielded or unshielded SLL category cables where these cables enter equipment enclosures:

(1) Separation for cable point-of-entrance locations shall be as much as stuffing tube plate or other dimensions, terminal board locations, and interior or exterior space limitations allow.

(2) Separation will not be required for point of entrance into equipment providing all of the other active or passive cables which would violate the separation requirement are entering the same equipment.

5-3-4 General Cable Separation Requirements

These general cable separation requirements apply to those cables not specifically covered in the cable chart. Separation distance specified shall be measured between the outer sheaths of the cable or between the external shields.

a. The separation specified between LL and PASSIVE, XLL and PASSIVE, and SLL and PASSIVE shall be maintained between the SLL, XLL, LL category cables, and other interference sources. Examples of other interference sources are separately mounted transformers, fluorescent light fixtures, power supplies, power panels, motors generators, controllers, and electronic transmitters.

b. If it is not feasible to maintain minimum separation of cables in the LL and SLL category in any portion of a cable run within a watertight compartment, the entire cable shall be shielded.

5-3-5 Dual Purpose Cables

Cables serving a dual purpose (transmitting and receiving) shall be identified with both categories. For example, cables between sonar transducers and terminal equipment may function as both transmitting cable and a receiver cable. Such a cable should be marked with appropriate shielding category designators such as SHL/SLL. An rf cable between a communication transceiver and the associated antenna could be marked RHL/LL.

The shielding and/or separation requirement for a dual purpose cable shall be in accordance with the methods outlined in the cable chart for the category of cable requiring the greater separation or the better shielding.

APPENDIX B

GUIDELINES FOR SPACING AND SHIELDING REQUIREMENTS AT AN INTERFACE

APPENDIX B

GUIDELINES FOR CABLE SPACING AND SHIELDING REQUIREMENTS AT AN INTERFACE

TABLE OF CONTENTS

Paragraph		Page
B-1	INTRODUCTION B-1	B-1
B-2	SCOPE B-1	B-1
B-3	GENERAL PROCEDURE FOR DEVELOPING INTERFACE CABLE SPACING AND SHIELDING REQUIREMENTS B-1	B-1
B-3.1	Develop Functional Equivalence	B-1
B-3.2	Recategorize Interfacing System Cables	B-1
B-3.3	Generate Cable Spacing Matrix	B-2
B-3.4	Resolve Prohibitive Cable Spacing Requirements	B-2
B-4	SECTION 5 and SECTION 6 CABLE SPACING AND SHIELDING INTERFACE REQUIREMENTS	B-2
B-4.1	Section 5 Versus Section 6 Functional Equivalence	B-2
B-4.2	Section 5 Versus Section 6 Interface Spacing and Shielding Requirements Matrix	B-2
B-5	CABLE SPACING AND SHIELDING REQUIREMENTS AT THE INTERFACE OF CCS (SECTION 6) AND SWS	B-2
B-5.1	Section 6 Versus SWS Functional Equivalence	B-2
B-5.2	CCS Versus SWS Interface Spacing and Shielding Requirements Matrix	B-2

LIST OF TABLES

Table		Page
B-1	Section 5 Versus Section 6 Functional Equivalence	B-3
B-2	Section 5 Versus Section 6 Cable Spacing/Shielding Requirements	B-4
B-3	CCS/SWS Cable Interface Spacing/Shielding Requirements Matrix (Rev A)	B-5

APPENDIX B

GUIDELINES FOR CABLE SPACING AND SHIELDING REQUIREMENTS AT AN INTERFACE

B-1 INTRODUCTION

In situations where more than one set of cable spacing and shielding requirements are implemented on the same platform, a compatible set of joint requirements must be developed and applied at the common interface. This section provides two examples of interface requirements that have been developed and implemented on submarine platforms.

B-2 SCOPE

Spacing and shielding requirements provided in this section apply only at the following designated interfaces:

a. Cable installations in accordance with section 5 of NAVSEA 0967-LP-283-5010 and section 6 of either NAVSEA 0967-LP-283-5010 or S9407-AB-HBK-010 (including Revision 1).

b. The Command and Control System (CCS) installed in accordance with section 6 of either NAVSEA 0967-LP-283-5010 or S9407-AB-HBK-010 (including Revision 1), and the Strategic Weapons System (SWS) installed in accordance with SWS Coordinated Drawing 3191445.

The procedure employed to develop these requirements illustrates a general approach that can be used to establish adequate spacing and shielding at a given interface.

B-3 GENERAL PROCEDURE FOR DEVELOPING INTERFACE CABLE SPACING AND SHIELDING REQUIREMENTS

In applying the cable spacing and shielding requirements given in section 6 at an interface, all the requirements imposed on both systems must be observed. This includes bonding and grounding practices as well as cable spacing requirements. Paragraphs B-3.1 through B-3.4 describe a general procedure that can be used to develop cable spacing and shielding requirements at an interface.

B-3.1 Develop Functional Equivalence

Developing a functional equivalence between section 6 cable categories and those of the interfacing system requires detailed information regarding the latter. Much of this can be obtained from technical manuals, equipment design specifications, and installation requirements.

B-3.2 Recategorize Interfacing System Cables

Using equivalent cable category information, recategorize the interfacing system cables in terms of the section 6 cable designators. If all cable designator information is not available, the category may be assigned and the group numbers determined later.

B-3.3 Generate Cable Spacing Matrix

The interface cable spacing matrix compares the section 6 cable categories to the interface cable categories. Cable spacing is specified at matrix coordinates when the cable designator can be fully described. When this is not the case, the procedures of section 6 must be used to determine the spacing.

B-3.4 Resolve Prohibitive Cable Spacing Requirements

Interface cable spacing may become prohibitive where the requirements of both systems must be satisfied. In these cases, tradeoffs may be necessary to resolve problems. It should be noted that this approach may lead to greater overall cable spacing than that required by either system when installed separately.

B-4 SECTION 5 AND SECTION 6 CABLE SPACING AND SHIELDING INTERFACE REQUIREMENTS

B-4.1 Section 5 Versus Section 6 Functional Equivalence

A review of the development of section's 5 and 6 shows that their spacing requirements do not correspond quantitatively. Section 6 spacing requirements were developed using mathematical analyses and validation testing and can be numerically defined - - this was not the case with section 5 requirements. To develop a numerical relationship between these sections, the section 5 cables are recategorized using section 6 criteria. This establishes the functional equivalence between cable categories presented in table B-1.

B-4.2 Section 5 Versus Section 6 Interface Spacing and Shielding Requirements Matrix

Employing the functional equivalence concept of paragraph B-3.1 and section 6 cable category spacings, joint interface spacing requirements were developed. The cable interface spacing/shielding requirements matrix is presented in table B-2. It should be noted that the cable spacings given in the matrix represent a worst case, i.e., the greatest spacing to ensure compatibility.

B-5 CABLE SPACING AND SHIELDING REQUIREMENTS AT THE INTERFACE OF CCS (SECTION 6) AND SWS

B-5.1 Section 6 Versus SWS Functional Equivalence

The SWS cables were recategorized using section 6 criteria and observing the SWS definitions and requirements given in SWS Coordination Drawing 3191445, Rev F. A functional equivalence was established as a result of this effort.

B-5.2 CCS Versus SWS Interface Spacing and Shielding Requirements Matrix

As in the case of the section 5 versus section 6 matrix (table B-2), a similar set of requirements for CCS versus SWS was developed. This spacing and shielding matrix is presented in table B-3.

Table B-1. Section 5 Versus Section 6 Functional Equivalence

Section 5 Category	Function	Section 6 Category
VHL	Radar, Radio, and Sonar Transmission	R3, R4
SHL	Sonar Transmission	R3
RHL	Radio Transmission	R4
LL	Radio, and Sonar Reception Above 100 kHz	S3
XLL*	Radio, and Navigation Reception Below 100 kHz	S1, S2
SLL	Sonar Reception Below 100 kHz	S4
TIF	Radar/IFF Transceiver	R4/S3
WLL	Data Transmission	R5, R6, R7, R8
WLX	Missile Function and Guidance Power	R5, R6, R7, R9
Passive	Power Plus Miscellaneous	R1, R2, R9

* This cable shielded in high permeability flexible metal conduit without exception.

Table B-2. Section 5 Versus Section 6 Cable Spacing/Shielding Requirements

		SECTION 5 CABLE CATEGORIES									
		RHL	LL	WLL	*XLL	WLX	SHL	PAS	SLL	TIF	VHL
SECTION 6 CABLE CATEGORIES	R1	1	2	1	Note 1	1	0	0	Note 1	2	1
	R2	1	2	2	Note 1	2	0	0	Note 1	2	1
	R3	1	2	1	5	1	1	1	6	2	1
	R4	0	2	1	2	1	1	1	3	2	1
	R5	1	2	1	1	0	1	1	3	2	1
	R6	1	2	1	2	0	1	2	7	2	1
	R7	1	2	1	4	0	1	2	Note 1	2	1
	R8	1	2	1	2	1	1	1	3	2	1
	R9	0	0	0	0	0	0	0	Note 1	0	0
	S1	2	0	Note 1	0	Note 1	7	Note 1	0	2	7
	S2	2	0	7	0	7	6	Note 1	0	2	6
	S3	2	0	2	0	2	2		0	2	2
	S4	3	0	Note 1	0	Note 1	6	Note 1	0	3	6

* This cable shielded in high permeability flexible metal conduit without exception.

NOTES:

1. Employ procedures contained in section 6 to determine cable spacing requirement.

2. Spacing requirements are in inches.

Table B-3. CCS/SWS Cable Interface Spacing/Shielding Requirements Matrix (Rev A) (Sheet 1 of 2)

		SWS CATEGORIY							
		PWR	RAD	Note 1 WLL	Note 1 SEN	Note 2 LL	Note 2 XLL	Note 2 SHL	Note 2 H/L
SECTION 6 CABLE CATEGORIES	R1	0	0	[2]	[2]	0	[2]	0	0
	R2	0	0	[2]	[2]	0	[2]	0	0
	R3	1	0	[2]	[2]	0	[2]	0	0
	R4	1	1	[2]	[2]	0	[2]	0	0
	R5	1	1	Note 5 [2]	Note 5 [2]	0	0	0	0
	R6	2	2	1	1	0	0	0	0
	R7	2	2	1	1	0	0	0	0
	R8	1	1	1	1	0	0	0	0
	R9	0	0	0	0	0	0	0	0
	S1	Note 3	Note 4 14	Note 4 14	Note 4 14	0	0	0	0
	S2	Note 3	Note 4 14	Note 4 14	Note 4 14	0	0	0	0
	S3	Note 4 2	Note 4 2	Note 4 2	Note 4 2	0	0	0	0
	S4	Note 3	Note 4 14	Note 4 14	Note 4 14	0	0	0	0

NOTES:

A. Cables spacing values shown in the table are given in inches and are measured between the closest points of the outer sheath or shielding of the individual cables or bundles of cables.

B. The symbol enclosing a spacing value in the table is from SWS Coordination Drawing 3191445, applies to the SWS cable, and is defined as follows:

[ ] = Minimum spacing allowed, without exception.

Table B-3. CCS/SWS Cable Interface Spacing/Shielding Requirements Matrix (Rev A) (Sheet 2 of 2)

MATRIX NOTES:

1. Shield this cable in electrostatic sheath or armor, from equipment enclosure or penetration "A" to equipment enclosure or penetration "B."

2. Shield this entire cable with high permeability flexible metal conduit (on inboard routings).

3. To determine spacing, identify worst case power cable in terms of section 6 category R1 or R2, figure 6-1, and use the section 6 spacing/shielding requirements.

4. Where the indicated spacing cannot be achieved, determine the equivalent section 6 category for the SWS cable, using specific cable and functional data to be supplied by SSPO upon NAVSEA request. Use the section 6 spacing/shielding requirements to determine the minimum spacing with shielding.

5. Minimum spacing is 2 inches, except that WLL and SEN categories may be routed with zero spacing from sound powered telephone cables categorized R5. (Sound powered telephone cables categorized R5 have the following lead number prefixes: C-2JV, C-EM, C-1SJ, C-SJ, C-X1J, C-8JP, C-JA, C-10JC, C-X43J, C-2JX, C-1MJ, C-X6J, and C-E.)

APPENDIX C

QUALIFIED PRODUCTS LIST FOR FLEXIBLE SHIELDING CONDUIT AND FITTINGS

APPENDIX C

QUALIFIED PRODUCTS LIST FOR FLEXIBLE SHIELDING CONDUIT AND FITTINGS

TABLE OF CONTENTS

Paragraph		Page
C-1	INTRODUCTION	C-1
C-2	BACKGROUND	C-1
C-3	PROCUREMENT OF NAVSEA 0967-LP-283-5010 HARDWARE AND/OR S9407-AB-HBK-010 HARDWARE	C-1

LIST OF TABLES

Table		Page
C-1	Manufacturer Codes	C-2
C-2	Flexible Shielding Conduit	C-3
C-3	GR2000-Series Fittings for Flexible Conduit (Braze-On Type)	C-4
C-4	RP2000-Series Fittings for Flexible Conduit (Reusable Type)	C-5

APPENDIX C

QUALIFIED PRODUCTS LIST FOR FLEXIBLE SHIELDING CONDUIT AND FITTINGS

C-1 INTRODUCTION

The following is a list of qualified vendors of flexible shielding conduit specified in appendix D, GR2000-series fittings specified in section 4, and RP2000-series fittings specified in section 5 of this handbook.

Questions or comments concerning this list should be directed to: Commander, Naval Sea Systems Command, Code 05H3, Washington, DC 20375, phone (202) 791-3140, or other NAVSEA-designated authority.

C-2 BACKGROUND

A requirement still exists for shielding hardware as described in NAVSEA 0967-LP-283-5010 "Handbook of Shipboard Electromagnetic Shielding Practices," the publication which preceded this S9407-AB-HBK-010 document. The basic difference between the shielding hardware specified in the two documents is as follows:

a. NAVSEA 0967-LP-283-5010 did not standardize the outside diameters of each of the sizes of flexible shielding conduit. As a result, the outside diameters varied with each vendor, and it was necessary to purchase the associated fittings from the same vendor in order to ensure dimensional compatibility. Also, an olive-drab finish over the electroless-nickel plate on the fittings was specified.

b. The S9407-AB-HBK-010 document standardizes the outside diameters of each of the sizes of flexible shielding conduit, and sizes the associated fittings to fit this standardized conduit. Also, the requirement for an olive-drab finish over the electroless-nickel plate is deleted for the reasons that the olive-drab finish is not a critical requirement for adequate corrosion protection for below-decks applications, and also as a visual means of differentiating between the new and the old fittings.

C-3 PROCUREMENT OF NAVSEA 0967-LP-283-5010 HARDWARE AND/OR S9407-AB-HBK-010 HARDWARE

The following policies of the four qualified vendors regarding procurement of hardware described in either the NAVSEA 0967-LP-283-5010 (Document (a)) or S9407-AB-HBK-010 (Document (b)) are listed below:

a. DCX-CHOL Enterprises, formerly Breeze-Illinois, Inc. (BI), will supply flexible shielding conduit only to Document (b) because they have standardized their tooling to Document (b). However, they will supply associated fittings according to either Documents (a) or (b) based on a clear indication as to which type is required.

b. Flexible Metal Hose Mfg Co. (FMH) will associated fittings to either Documents (a) or (b) provided that the purchase order clearly states whether the 0967-LP-283-5010 or the S9407-AB-HBK-010 hardware is required.

c. Elliott Manufacturing, formerly ServicAir Company (S), will supply flexible shielding conduit and associated fittings as stated in b above.

d. Glenair, Inc. (G) will supply flexible shielding conduit and associated fittings to either Documents (a) or (b) provided that the purchase order clearly states whether the 0967-LP-283-5010 or the S9407-AB-HBK-010 hardware is required.

If no indication is given by the purchaser as to which document applies, the vendors will normally send hardware according to S9407-AB-HBK-010. The purchaser should contact the individual vendors for specific details and any exceptions to the above statements. A typical exception may be the use of low-carbon steel for the RP2000-series conduit couplings, in accordance with Document (b), instead of Hipernom, in accordance with Document (a). This substitution is cost effective and acceptable by NAVSEA.

Table C-1. Manufacturer Codes

Mfr's Code	Manufacturer
BI	DCX-CHOL Enterprises Inc., Elecsys Division 225 Enterprise Drive Pekin, IL 61554 PHONE: (309) 353-4455
FMH	FMH Corporation 345 Fisher Ave. Costa Mesa, CA 92626 PHONE: (714) 751-1000
G	Glenair, Inc. 1211 Air Way Glendale, CA 91201-2497 PHONE: (818) 247-6000
S	Elliott Manufacturing PO BOX 773 Binghamton, NY 13902 PHONE: (607) 772-0404

Table C-2. Flexible Shielding Conduit

Conduit Size (nom ID)	TYPE 1 (NONJACKETED) CONDUIT				TYPE 2 (JACKETED) CONDUIT			
	Navy Part No.	Mfr Code*	Mfr Part No.	EST wt/ft (lbs)	Navy Part No.	Mfr Code*	Mfr Part No.	EST wt/ft (lbs)
1/4	EMO2	BI	023700-HP0250	0.11	EMO2R	BI	023700-HE0250	0.17
		S	SM83-02	0.102		S	SM83-02N	0.1895
		G	750-084-08	0.105		G	750-085-08	0.195
3/8	EM03	BI	023700-HP0375	0.16	EM03R	BI	023700-HP0375	0.24
		S	SM83-03	0.153		S	SM83-03N	0.2499
		G	750-084-12	0.155		G	750-085-12	0.255
1/2	EM04	BI	023700-HP0500	0.20	EM04R	BI	023700-HP0500	0.30
		S	SM83-04	0.208		S	SM83-04N	0.330
		G	750-084-16	0.210		G	750-085-16	0.340
5/8	EM05	BI	023700-HP0625	0.24	EM05R	BI	023700-HP0625	0.39
		S	SM83-05	0.252		S	SM83-05N	0.380
		G	750-084-20	0.260		G	750-085-20	0.390
3/4	EM06	BI	023700-HP0750	0.34	EM06R	BI	023700-HP0750	0.54
		S	SM83-06	0.308		S	SM83-06N	0.444
		G	750-084-24	0.310		G	750-085-24	0.450
1	EM08	BI	023700-HP1000	0.46	EM08R	BI	023700-HP1000	0.68
		S	SM83-08	0.514		S	SM83-08N	0.753
		G	750-084-32	0.520		G	750-085-32	0.760
1-1/4	EM10	BI	023700-HP1250	0.56	EM10R	BI	023700-HP1250	0.80
		S	SM83-10	0.628		S	SM83-10N	0.853
		G	750-084-40	0.630		G	750-085-40	0.860
1-1/2	EM12	BI	023700-HP1500	0.69	EM12R	BI	023700-HP1500	0.89
		S	SM83-12	0.746		S	SM83-12N	1.002
		G	750-084-48	0.750		G	750-085-48	1.050
2	EM16	S	SM83-16	1.133	EM16R	S	SM83-16N	1.498
		G	750-084-64	1.140		G	750-085-64	1.500
2-1/2	EM20	S	SM83-20	1.408	EM20R	S	SM83-20N	1.7794
		G	750-084-80	1.410		G	750-085-80	1.7900
3	EM24	S	SM83-24	1.680	EM24R	S	SM83-24N	2.0609
		G	750-084-96	1.690		G	750-085-96	2.0900

* See Table C-1.

Table C-3. GR2000-Series Fittings for Flexible Conduit (Braze-on Type)

GR2000-SERIES		Trans Technology Electronics	Flexible Metal Hose Co.	G&H Technology	Glenair, Inc.
Fig. No.	Basic Part No.	Part No.	Basic Part No.	Basic Part No.	Basic Part No.
4-1	GR2120	222837-FE5100	7000-511	S72120	GR2120
4-2	GR2121	222838-FE5100	71315	S72121	GR2121
4-3	GR2122 (Style A)	222839-FE5100	7000-508	S72122	GR2122 (Style A)
4-4	GR2122 (Style B)	222840-FE5100	71316	S72122B	GR2122 (Style B)
4-5	GR2123	222841-FE5100	7000-507	S72123	GR2123
4-6	GR2124	222842-FE5100	7000-511	S72124	GR2124
4-7	GR2125	222843-FE5100	7000-511	S72125	GR2125
4-8	GR2126	222844-FE5100	7000-600	S72126	GR2126
4-9	GR2127	222845-FE5100	7000-372	S72127	GR2127
4-10	GR2128	222846-FE5100	7000-421	S72128	GR2128
4-11	GR2129	222847-FE5100	7000-655	S72129	GR2129

NOTES:

1. The GR2120, GR2123, GR2124, and GR2125 transition fittings must be obtained only from the qualified sources listed above. The other GR2000-Series fittings may be obtained from any source which manufacturers them in accordance with section 4 of this handbook.

2. The manufacturer's part number development for any particular fitting size may be obtained from the individual manufacturers or their representatives.

Table C-4. RP2000-Series Fittings for Flexible Conduit (Reusable Type) (Sheet 1 of 4)

RP2000-SERIES		Trans Technology Electronics	Flexible Metal Hose Co.	G&H Technology	Glenair, Inc.
Fig. No.	Basic Part No.	Part No.	Basic Part No.	Basic Part No.	Basic Part No.
5-1	RP2100	See sheets 2, 3 and	7000-718	S82100	RP2100
5-2	RP2110	4 for part numbers	7000-869	S82110	RP2110
5-3	RP2120		71052	S82120	RP2120
5-4	RP2130		70977	S82130	RP2130
5-5	RP2140		71050	S82140	RP2140
5-6	RP2141		71317	S82141	RP2141
5-7	RP2200		7000-690	S82200	RP2200
5-8	RP2210		70978	S82210	RP2210
5-9	RP2311		71003	S82311	RP2311
5-10	RP2321		7000-716	S82321	RP2321
5-11	RP2330		7000-715	S82330	RP2330
5-12	RP2340		71048	S82340	RP2340
5-13	RP2350		71083	S82350	RP2350
5-14	RP2360		71319	S82360	RP2360
5-15	RP2400		7000-714	S82400	RP2400
5-16	RP2411		71323	S82411	RP2411
5-17	RP2420		71047	S82420	RP2420
5-18	RP2430		70979	S82430	RP2430
5-19	RP2431		71318	S82431	RP2431
5-20	RP2440		71091	S82440	RP2440
5-21	RP2500		7000-717	S82500	RP2500
5-22	RP2610		71054	S82610	RP2610
5-23	RP2620		71085	S82620	RP2620

NOTES:

1. The RP2100- and RP2200-Series fittings must be obtained only from the qualified sources listed above. Since the RP2300- through RP2600-Series adapters are simple threaded fittings, they may be obtained from any source that manufactures them in accordance with section 5 of this handbook.

2. The manufacturer's part number development for any particular fitting size may be obtained from the individual manufacturers or their representative.

Table C-4. RP2000-Series Fittings for Flexible Conduit (Reusable Type) (Sheet 2 of 4)

Part Number S9407-AB-HBK-010	Part Number Trans Technology Electronics	Part Number S9407-AB-HBK-010	Part Number Trans Technology Electronics
RP2100-EM03-S	200701-FE5103	RP2120-EM16-S	220679-FE5100
RP2100-EM03-T	200702-FE5103	RP2120-EM16-T	220719-FE5100
RP2100-EM05-S	200701-FB5105	RP2130-EM03	200731-FE5103
RP2100-EM06-S	200701-FE5106	RP2130-EM06	200731-FE5106
RP2100-EM06-T	200702-FE5106	RP2130-EM08	200731-FE5108
RP2100-EM08-S	200701-FE5108	RP2130-EM10	200731-FE5110
RP2100-EM08-T	200702-FE5108	RP2140-EM02	220847-FE5100
RP2100-EM10-S	200701-FE5110	RP2140-EM03	220848-FE5100
RP2100-EM12-T	200702-FE5112	RP2140-EM04	220849-FE5100
RP2100-EM16-T	200702-FE5116	RP2140-EM05	220850-FE5100
RP2110-EM02-S	220725-FE5100	RP2140-EM06	220851-FE5100
RP2110-EM02-T	220737-FE5100	RP2140-EM08	220852-FE5100
RP2110-EM03-S	220726-FE5100	RP2140-EM10	220853-FE5100
RP2110-EM03-T	220738-FE5100	RP2140-EM12	220854-FE5100
RP2110-EM04-S	220727-FE5100	RP2140-EM16	220855-FE5100
RP2110-EM04-T	220739-FE5100	RP2141-EM02	220966-FE5100
RP2110-EM05-S	220728-FE5100	RP2141-EM03	220967-FE5100
RP2110-EM05-T	220740-FE5100	RP2141-EM04	220968-FE5100
RP2110-EM06-S	220729-FE5100	RP2141-EM05	220969-FE5100
RP2100-EM06-T	220741-FE5100	RP2141-EM06	220970-FE5100
RP2100-EM08-S	220730-FE5100	RP2141-EM08	220971-FE5100
RP2110-EM08-T	220742-FE5100	RP2141-EM10	220972-FE5100
RP2110-EM10-S	220731-FE5100	RP2141-EM12	220973-FE5100
RP2110-EM10-T	220743-FE5100	RP2141-EM16	220974-FE5100
RP2110-EM12-S	220732-FE5100	RP2200-EM05	200747-FE5105
RP2110-EM12-T	220744-FE5100	RP2200-EM06	200747-FE5106
RP2100-EM16-S	220733-FE5100	RP2200-EM08	200747-FE5108
RP2110-EM16-T	220745-FE5100	RP2200-EM10	200747-FE5110
RP2120-EM02-S	220671-FE5100	RP2200-EM12	200747-FE5112
RP2120-EM02-T	220711-FE5100	RP2210-EM02	222384-FE5100
RP2120-EM03-S	220672-FE5100	RP2210-EM03	222385-FE5100
RP2120-EM03-T	220712-FE5100	RP2210-EM04	222386-FE5100
RP2120-EM04-S	220673-FE5100	RP2210-EM06	222387-FE5100
RP2120-EM04-T	220713-FE5100	RP2210-EM08	222388-FB5100
RP2120-EM05-S	220674-FE5100	RP2210-EM08	222388-FE5100
RP2120-EM05-T	220714-FE5100	RP2210-EM10	222389-FE5100
RP2120-EM06-S	220675-FE5100	RP2210-EM12	222390-FE5100
RP2120-EM06-T	220715-FE5100	RP2210-EM16	222391-FE5100
RP2120-EM08-S	220676-FE5100	RP2210-EM20	222392-FE5100
RP2120-EM08-T	220716-FE5100	RP2311-08-05-03	208572-FE5100
RP2120-EM10-S	220677-FE5100	RP2311-09-05-01	222335-FE5100
RP2120-EM10-T	220717-FE5100	RP2311-09-06-03	216866-FE5100
RP2120-EM12-S	220678-FE5100	RP2311-10-06-02	220566-FE5100
RP2120-EM12-T	220718-FE5100	RP2311-1.06-18-08-03	212501-FE5100

Table C-4. RP2000-Series Fittings for Flexible Conduit (Reusable Type) (Sheet 3 of 4)

Part Number S9407-AB-HBK-010	Part Number Trans Technology Electronics	Part Number S9407-AB-HBK-010	Part Number Trans Technology Electronics
RP2311-1-08-H-010	208570-FE5100	RP2350-36-12-02	220539-FE5100
RP2311-13-05-01	222326-FE5100	RP2350-40-12-01	216951-FE5100
RP2311-13-06-01	222334-FE5100	RP2350-40-12-02	220538-FE5100
RP2311-13-06-02	216958-FE5100	RP2350-44-16-01	216952-FE5100
RP2311-13-08-01	222332-FE5100	RP2350-44-16-02	216953-FE5100
RP2311-13-08-02	222325-FE5100	RP2400-02-06	220395-FE5100
RP2311-14-08-02	222330-FE5100	RP2400-02-08	220393-FE5100
RP2311-15-06-01	216964-FE5100	RP2400-05-06	220394-FE5100
RP2311-15-10-02	216959-FE5100	RP2400-05-08	220396-FE5100
RP2311-16-06-01	222329-FE5100	RP2400-08-STN	200871-FX0000
RP2311-16-08-01	222337-FE5100	RP2400-08-06	220388-FE5100
RP2311-16-08-02	213555-FE5100	RP2400-08-08	220390-FE5100
RP2311-16-10-01	208576-FE9300	RP2400-08-10	200871-FE5100
RP2311-16-10-03	222336-FE5100	RP2400-15-16	200875-FE5100
RP2311-17-06-01	216963-FE5100	RP2411-06-08	212507-FE5107
RP2311-17-10-01	220397-FE5100	RP2411-07-06	212508-FE5100
RP2311-18-06-01	216987-FE5100	RP2420-01-08	222269-FE5100
RP2311-18-08-01	222333-FE5100	RP2420-04-08	222346-FE5100
RP2311-18-10-01	212500-FE5100	RP2420-05-10	208568-FE5100
RP2311-18-10-01	212500-FK5300	RP2440-03-N	222567-FX0000
RP2311-18-10-02	208346-FE5100	RP2440-05-N	222345-FX0000
RP2311-19-08-01	208573-FE5100	RP2440-06-N	222244-FX0000
RP2311-19-08-01	208573-FK5300	RP2440-06-STN	220385-FY0000
RP2311-19-10-01	208577-FE5100	RP2440-08-N	220518-FX0000
RP2311-21-10-01	222331-FE5100	RP2440-12-N	216955-FX0000
RP2321-01-03	222341-FE5100	RF2500-02	220632-FE5100
RP2321-03-06	212963-FE5100	RP2500-03	220633-FE5100
RP2321-03-06	212963-FK5300	RP2500-04	220634-FE5100
RP2330-04-03	220565-FE5100	RP2500-05	220635-FE5100
RP2330-08-03	213415-FE5100	RP2500-06	220636-FE5100
RP2330-08-04	212466-FX0000	RP2500-08	220637-FE5100
RP2330-08-05	216960-FE5100	RP2500-10	220638-FE5100
RP2330-08-06	216885-FE5100	RP2500-12	220639-FE5100
RP2330-10-04	212465-FE5100	RP2500-16	220640-FE5100
RP2330-10-06	216961-FE5100	RP2610-02	220643-FE5100
RP2330-18-06-02	208347-FE5100	RP2610-03	220644-FE5100
RP2340-13-06-03	222343-FE5100	RP2610-04	220645-FE5100
RP2340-17-08-03	213186-FE5100	RP2610-05	220646-FE5100
RP2340-19-06-01	222339-FE5100	RP2610-06	220647-FE5100
RP2340-19-10-03	222338-FE5100	RP2610-08	220648-FE5100
RP2340-21-08-01	222340-FE5100	RP2610-10	220649-FE5100
RP2350-10-04-01	208348-FE5100	RP2610-12	220650-FE5100
RP2350-14-03-02	220564-FE5100	RP2610-16	220651-FE5100
RP2350-18-06-02	220563-FE5100	RP2620-02	220613-FE5100
RP2350-28-06-02	220562-FE5100	RP2620-03	220614-FE5100
RP2350-32-10-1	216956-FE5100	RP2620-04	220615-FE5100

Table C-4. RP2000-Series Fittings for Flexible Conduit (Reusable Type) (Sheet 4 of 4)

Part Number S9407-AB-HBK-010	Part Number Trans Technology Electronics	Part Number S9407-AB-HBK-010	Part Number Trans Technology Electronics
RP2620-05	220616-FE5100	RP2620-10	220619-FE5100
RP2620-06	220617-FE5100	RP2620-10	208578-FE6600
RP2620-08	220618-FE5100	RP2620-12	220620-FE5100
RP2620-08	208575-FE6600	RP2620-16	220621-FE5100

APPENDIX D

SPECIFICATION FOR FLEXIBLE SHIELDING CONDUIT

APPENDIX D

SPECIFICATION FOR FLEXIBLE SHIELDING CONDUIT

TABLE OF CONTENTS

Paragraph		Page
	LIST OF ILLUSTRATIONS	D-iii
	LIST OF TABLES	D-iii
	FOREWORD	D-iv
1.	SCOPE	D-1
1.1	Scope	D-1
1.2	Classification	D-1
1.2.1	Types	D-1
1.2.2	Conduit part number	D-1
2.	APPLICABLE DOCUMENTS	D-2
2.1	Issues of documents	D-2
2.2	Other publications	D-2
3.	REQUIREMENTS	D-3
3.1	Classification of requirements	D-3
3.2	Qualification	D-3
3.3	Quality conformance	D-3
3.4	Design and construction	D-3
3.5	Materials	D-3
3.5.1	Tubing material	D-3
3.5.2	Annealing of tubing material	D-3
3.5.3	Seam interlock material	D-4
3.5.4	Braid material	D-4
3.5.5	Jacket material	D-4
3.5.6	Heat-shrinkable tubing	D-4
3.6	Physical characteristics	D-4
3.6.1	Sizes and dimensions	D-4
3.6.2	Lengths	D-5
3.6.3	Seams and joints	D-5
3.6.4	Inner surfaces	D-5
3.6.5	Braid	D-5
3.6.6	Rubber jacket	D-5
3.6.7	Splices	D-6
3.6.8	Ends	D-6
3.7	Performance characteristics	D-6
3.7.1	Watertightness	D-6
3.7.2	Bend radius	D-6
3.7.3	Shielding effectiveness	D-6
3.8	Interchangeability	D-6
3.9	Marking	D-6
3.10	Manufacturer’s technical data	D-6

TABLE OF CONTENTS (Continued)

Paragraph		Page
3.11	Workmanship	D-6
4.	QUALITY ASSURANCE PROVISIONS	D-7
4.1	Responsibility for inspection	D-7
4.1.1	Test equipment and inspection facilities	D-7
4.2	Classification of inspections	D-7
4.3	Materials inspection	D-7
4.4	Qualification inspection	D-7
4.4.1	Qualification test sample	D-8
4.4.2	Failures	D-8
4.4.3	Qualification of similar conduit	D-8
4.4.4	Retention of qualification	D-8
4.5	Quality conformance inspection	D-8
4.5.1	Production lot	D-8
4.6	Methods of inspection	D-8
4.6.1	Visual inspection	D-9
4.6.2	Dimensional inspection	D-9
4.6.3	Braid coverage	D-9
4.6.4	Tightness of covering	D-10
4.6.5	Watertightness	D-10
4.6.6	Bend radius	D-10
4.6.7	Shielding effectiveness	D-12
4.7	Test reports	D-12
4.8	Quality assurance	D-12
5.	PACKAGING	D-12
5.1	Cleaning	D-12
5.2	Preservatives	D-13
5.3	Identification tags	D-13
5.4	Unit packaging	D-14
5.5	Wrapping	D-14
5.6	Marking of shipping containers	D-14
6.	NOTES	D-14
6.1	Intended use	D-14
6.1.1	Type 1 conduit	D-14
6.1.2	Type 2 conduit	D-14
6.2	Ordering data	D-15
6.3	Qualified products list	D-15
6.3.1	Qualification provisions	D-15
	INDEX	D-16

LIST OF ILLUSTRATIONS

Figure		Page
1	Conduit configuration	D-4
2	Typical braid section	D-10
3	Bend-radius test setup	D-11
4	Typical pickup coil	D-13

LIST OF TABLES

Table		Page
I	Conduit dimensions (inches)	D-5
II	Materials inspection	D-7
III	Qualification inspection	D-8
IV	Quality conformance inspection	D-9
V	Data for bend-radius test	D-11

FOREWORD

As mentioned in section 1, this appendix contains a specification which establishes new standards for flexible shielding conduit. It describes standard dimensions and tolerances for 11 different sizes of conduit, including minimum ID, OD over braid, and OD over jacket. The format is similar to that of a Military Specification, since it is intended that this document will be published eventually as a Military Specification. The requirements of this specification apply in the interim between the date of publication of this handbook and the date of publication of the official Military Specification. This specification supersedes the flexible conduit specification in Appendix 1 of NAVSEA 0967-LP-283-5010. Flexible shielding conduit is specified as the primary means of shielding electrical cable in submarines and other ships and has applied to submarines built under contracts dated from October 1969.

It should be noted that whenever a reference is made in this appendix to a paragraph number, that number applies to the paragraphs located in the other sections of this handbook.

APPENDIX D

SPECIFICATION

CONDUIT, METAL, FLEXIBLE, FOR LOW FREQUENCY
ELECTROMAGNETIC SHIELDING APPLICATIONS

1. SCOPE

1.1 Scope. This specification establishes the requirements for manufacture and Government acceptance of flexible metal conduit for low frequency shielding applications (see 6.1).

1.2 Classification.

1.2.1 Types. Flexible metal conduit shall be of the following types, as specified (see 6.2):

Type 1 - Nonjacketed shielding conduit

Type 2 - Rubber-jacketed shielding conduit

1.2.2 Conduit Part Number. The part number for qualified conduit procured in accordance with this specification shall consist of the basic part designation, the conduit size code, and the conduit type code. The part number development is illustrated in the following example.

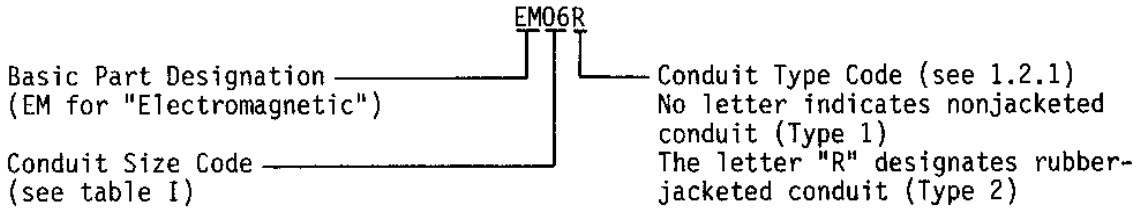

Beneficial comments (recommendations, additions, deletions) and any pertinent data which may be of use in proving this document should be addressed to Commander, Naval Sea Systems Command, Code 05H3, Washington, DC 20375.

2. APPLICABLE DOCUMENTS

2.1 Issues of Documents. The following documents, of the issue in effect on date of invitation for bids or request for proposal, form a part of this specification to the extent specified herein.

SPECIFICATIONS

Federal

QQ-B-650	-	Brazing Alloys, Copper, Copper-Zinc, and Copper-Phosphorous.
QQ-S-763	-	Steel Bars, Wire, Shapes, and Forgings, Corrosion Resisting.

Military

MIL-P-116	-	Preservation-Packaging, Methods of.
MIL-PRF-24758A		Conduit Systems, Flexible
MIL-R-6855	-	Rubber, Synthetic, Sheets, Strips, Molded or Extruded Shapes.
MIL-I-23053	-	Insulation Sleeving, Electrical, Heat-Shrinkable, General Specification for.
MIL-R-46846	-	Rubber, Synthetic, Heat Shrinkable.

STANDARDS

Military

MIL-STD-129	-	Marking for Shipment and Storage.

(Copies of specifications, standards, drawings, and publications required by contractors in connection with specific procurement functions should be obtained from the procuring activity or as directed by the contracting officer,)

2.2 Other Publications. The following documents form part of this specification to the extent specified herein. Unless otherwise indicated, the issue in effect on date of invitation for bids or request for proposal shall apply.

AMERICAN SOCIETY FOR TESTING AND MATERIALS (ASTM)

ANSI/ASTM-A-698	-	Magnetic Shield Efficiency in Attenuating Alternating Magnetic Fields.
ANSI/ASTM-A-753	-	Specification for Nickel-Iron Soft Magnetic Alloys.
ASTM-D-257		Surface Volume Resistivity

(Application for copies should be addressed to the American Society for Testing and Materials, 1916 Race Street, Philadelphia, PA 19103.)

3. REQUIREMENTS

3.1 Classification of requirements. The requirements for the conduit are classified herein as follows:

Requirement	Paragraph
Qualification	3.2
Quality conformance	3.3
Design and construction	3.4
Materials	3.5
Physical characteristics	3.6
Performance characteristics	3.7
Interchangeability	3.8
Marking	3.9
Manufacturer's technical data	3.10
Workmanship	3.11

3.2 Qualification. Flexible metal conduit furnished under this specification shall be products which are qualified for listing on the applicable qualified products list at the time set for opening of bids (see 4.4 and 6.3).

3.3 Quality conformance. The contractor shall test an initial production sample from each production lot for conformance with specification requirements prior to regular production on a contract (see 4.5).

3.4 Design and construction. Type 1 conduit (figure 1a) shall consist of metal tubing covered with a wire overbraid. The tubing material shall be an alloy having high magnetic permeability for electromagnetic shielding requirements and shall be corrosion resistant for environmental requirements. Construction of the tubing shall be in the form of helical or annular convolutes for flexibility. Seams in the tubing shall be hermetically sealed for water-tightness and shielding integrity. The outer braid covering shall be of steel wire for mechanical protection of the tubing. Type 2 conduit (figure 1b) shall consist of Type 1 conduit which is covered with a jacket of synthetic rubber for electrical insulation and marked on the outside with identification information.

3.5 Materials. Materials shall conform to applicable standards and be as specified herein. Materials which are not covered by specifications or which are not specifically described herein shall be of the best quality and shall be suitable for the purpose intended.

3.5.1 Tubing material. Material for the tubing and the coupling ring used for joining lengths of tubing shall be an alloy having high magnetic permeability and corrosion-resistant properties, such as provided by Alloy Type 4 of ANSI/ASTM-A-753. Typical trade names for this alloy include: Hipernom, HyMu "80", and Moly Permalloy.

3.5.2 Annealing of tubing material. All conduit tubing shall be annealed in accordance with standard practice in order to develop magnetic shielding properties necessary to meet the shielding effectiveness requirements of 3.7.3.

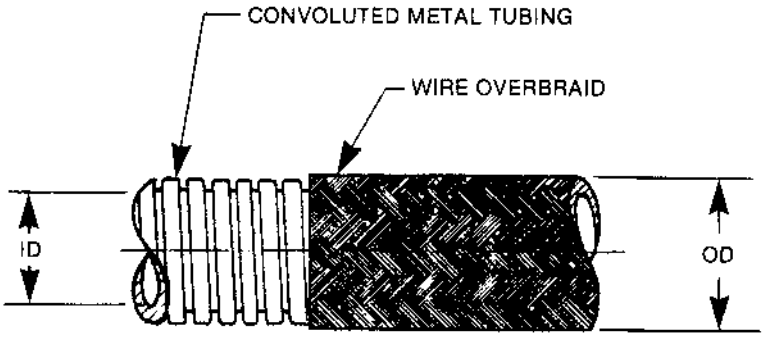

FIGURE 1a. Type 1 Conduit

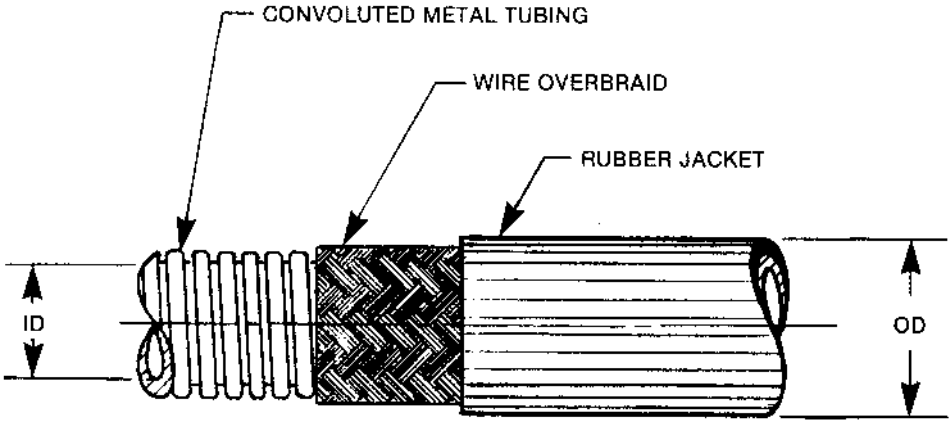

FIGURE 1b. Type 2 Conduit

FIGURE 1. Conduit configuration.

3.5.3 Seam interlock material. Seamsealing material, if used for hermetically sealing the tubing convolutions, shall conform to requirements of QQ-B-650, Class Bcu-1.

3.5.4 Braid material. Braid for both Type 1 and Type 2 conduit shall be made of stainless steel wire Class 304 or 321 as specified in QQ-S-763.

3.5.5 Jacket material. The jacket for Type 2 conduit shall be of synthetic rubber (polychloroprene) conforming to Class 2A, Grade 60, of MIL-R-6855 or equivalent material conforming to MIL-PRF-24758A. The material shall have a minimum volume resistivity of 1×10^9 ohm-cm as determined by ASTM-D-257.

3.5.6 Heat-shrinkable tubing. Heat-shrinkable tubing, when used to cover splices in rubber jackets, shall be of polychloroprene in accordance with Class 1 of MIL-I-23053/1, or Type I, Class 1, of MIL-R-46846.

3.6 Physical characteristics.

3.6.1 Sizes and dimensions. The nominal sizes, and inside and outside diameters, shall be as specified in Table I

3.6.2 Lengths. Conduit shall be furnished in the length or lengths specified by the procuring activity (see 6.2).

Table I. Conduit dimensions (inches).

Conduit size (nom)	Conduit size code	ID (min)	Type 1 (nonjacketed)		Type 2 (jacketed)		Minimum bend radius (inside)
			Part number	OD (over braid)	Part number	OD (over braid)	
1/4	02	0.245	EM02	0.42 ±0.01	EM02R	0.58 ±0.04	1-1/4
3/8	03	0.370	EM03	0.54 ±0.01	EM03R	0.70 ±0.04	2
1/2	04	0.495	EM04	0.69 ±0.01	EM04R	0.85 ±0.04	2-1/2
5/8	05	0.620	EM05	0.82 ±0.01	EM05R	0.98 ±0.04	3
3/4	06	0.745	EM06	0.94 ±0.01	EM06R	1.10 ±0.04	3-3/4
1	08	0.995	EM08	1.25 ±0.01	EM08R	1.41 ±0.04	5
1-1/4	10	1.245	EM10	1.50 ±0.01	EM10R	1.66 ±0.04	6-1/4
1-1/2	12	1.495	EM12	1.75 ±0.01	EM12R	1.91 ±0.04	7-1/2
2	16	1.995	EM16	2.28 ±0.015	EM16R	2.44 ±0.045	10
2-1/2	20	2.495	EM20	2.78 ±0.015	EM20R	2.94 ±0.045	12-1/2
3	24	2.995	EM24	3.28 ±0.015	EM24R	3.44 ±0.045	15

3.6.3 Seams and joints. Seams in the metal tubing shall be welded or brazed, and there shall be no reduction of the inside diameter or increase of outside diameter due to such welding or brazing. Joints (or splices) in the metal tubing shall be welded or brazed, and there shall be no increase in the outside diameter due to such welding or brazing. The coupling ring used for joining lengths of tubing shall not reduce the inside diameter at the joint more than 0.028 inches (maximum wall thickness of coupling ring inside the tubing shall be 0.014 inches). Material for the coupling ring shall be in accordance with 3.5.1. Seams and joints shall meet the requirements for inner surfaces specified in 3.6.4 and for watertightness specified in 3.7.1.

3.6.4 Inner surfaces. The metal tubing shall have smooth inner surfaces free of sharp burrs or edges that could abrade cable insulation. The interior shall be free also of particles of organic or metallic material that could contaminate or degrade cable insulation or be potentially corrosive.

3.6.5 Braid. The braid shall be woven from stainless steel wire as specified in 3.5.4. The braid shall be applied with sufficient tension so that there will be no looseness or bunching of the braid on the tubing. The braid shall provide a coverage of at least 90 percent of the tubing, as determined by the method of 4.6.3. Unless otherwise specified, only one layer of braid shall be applied.

3.6.6 Rubber jacket. The rubber jacket for Type 2 conduit shall be of a uniform thickness and free from pitting, and shall be applied with sufficient stretch around the circumference of the conduit to maintain a tight fit over the conduit braid. The wall thickness for the rubber jacket shall be 0.080 ±0.015 inches for all conduit sizes.

3.6.7 Splices. Two lengths of metal tubing shall be spliced (or joined) in accordance with 3.6.3. Splices in braid wires shall be neatly made and shall cause no sharp or rough projection on the conduit. Splices in the rubber jacket may be made either by a 3-inch (minimum) overlap, or by means of a butt joint that is covered with a 6-inch (minimum) length of heat-shrinkable polychloroprene tubing (see 3.5.6),

3.6.8 Ends. The ends of each length of conduit shall be cut square, with the ends of the braid wires secured to the tubing by brazing. Each end of the conduit shall be free from sharp edges, burrs, or excess brazing material which would interfere with the attachment of fittings.

3.7 Performance characteristics.

3.7.1 Watertightness. Conduit shall show no evidence of leakage or damage to the tubing when tested as specified in 4.6.5. If any section of the conduit fails to pass the test of 4.6.5, that section shall be rejected and any remaining conduit can be deemed acceptable only if it can be demonstrated by test that all of it is in compliance with requirements.

3.7.2 Bend radius. When tested as specified in 4.6.6, Type 1 and Type 2 conduit shall withstand bending in an arc of radius equal to that specified in Table I and shall show no evidence of internal obstruction or damage, of any kind to the tubing as a result of the test. Type 2 conduit shall, in addition, show minimum wrinkling of the rubber jacket on the inside of the bend when bent to the prescribed radius. Any failure of the test sample to meet the bend radius requirement shall be cause for rejection of the sample and of the production lot from which the samples were taken.

3.7.3 Shielding effectiveness. Shielding effectiveness throughout the frequency range of 30 Hz to 30 kHz shall be a minimum of 40dB for all conduit less than 2 inches in diameter and a minimum of 35 dB for 2-inch diameter conduit and larger when tested as specified in 4.6.7. Any failure of the test sample to meet the shielding effectiveness requirement shall be cause for rejection of the sample and of the production lot from which the samples were taken.

3.8 Interchangeability. All flexible metal conduit manufactured to this specification and having the same part number shall be completely interchangeable with each other with respect to physical (dimensional) and performance (functional) characteristics as specified herein.

3.9 Marking. The rubber jacket of Type 2 conduit shall be marked with an identifying legend printed with white ink in block character type. The size of this lettering shall be not less than 1/8 inch nor more than 1/4 inch. The legend shall consist of the wording "EMI SHIELDING CONDUIT," the conduit part number (see 1.2.2), and the manufacturer's name. Example of legend:

EMI SHIELDING CONDUIT - EM06R - (manufacturer's name)

The legend shall be repeated at intervals not exceeding two feet. The print shall not be obliterated by the action of petroleum base oil, fuels, hydraulic fluids, or water, and shall remain legible after abrasion caused by normal handling of the conduit. (See 5.3 for identification tags.)

3.10 Manufacturer's technical data. Manufacturer's technical data shall be furnished with the conduit supplied under this specification and shall include lot number, conduit part number, dimensions with tolerances, weight per foot, materials, and marking information.

3.11 Workmanship. All details of manufacture shall be in accordance with best practice for flexible metal conduit. The conduit shall be free from all defects which would adversely affect its serviceability.

4. QUALITY ASSURANCE PROVISIONS

4.1 Responsibility for inspection. Unless otherwise specified in the contract, the supplier is responsible for the performance of all inspection requirements as specified herein. except as otherwise specified in the contract, the supplier may use his own or any other facility suitable for the performance of the inspection requirements specified herein, unless disapproved by the Government. The Government reserves the right to perform any of the inspections set forth in this specification where such inspections are deemed necessary to assure supplies and services conform to prescribed requirements.

4.1.1 Test equipment and inspection facilities. Test and measuring equipment and inspection facilities of sufficient accuracy, quality, and quantity to permit performance of the required inspection shall be established and maintained by the supplier and/or a government approved subcontract facility.

4.2 Classification of inspections. The inspections for the conduit are classified herein as follows:

Inspection	Paragraph
Materials inspection	4.3
Qualification inspection	4.4
Quality conformance inspection	4.5

4.3 Materials inspection. Materials inspection shall consist of certification that the materials and annealing process listed in table II were used in fabricating the delivered flexible conduit.

4.4 Qualification inspection. Qualification inspection for inclusion in a qualified products list (QPL) (see 6.3) shall be performed by the Government on test samples that were produced with equipment and procedures normally used in production. The qualification test samples (see 4.4.1) shall be subjected to the inspections specified in table III.

Table II. Materials inspection.

Material or process	Requirement Paragraph	Applicable specification
Tubing	3.5.1	ANSI/ASTM-A-753, Alloy Type 4
Coupling ring	3.5.1	ANSI/ASTM-A-753, Alloy Type 4
Annealing	3.5.2	In accordance with standard practice
Seam interlock material	3.5.3	QQ-B-650, Class BCu-1
Braid	3.5.4	QQ-S-763, Class 304 or 321
Jacket	3.5.5	MIL-R-6855, Class 2A, Grade 60
Heatshrinkable tubing	3.5.6	MIL-I-230053/1, Class 1, or MIL-R-46846, Type 1, Class 1

Table III. Qualification inspection.

Inspection	Requirement Paragraph	Test method Paragraph
Visual	3.6, 3.9, 3.11	4.6.1
Dimensional	3.6.1	4.6.2
Braid coverage	3.6.5	4.6.3
Tightness of covering	3.6.6	4.6.4
Watertightness	4.7.1	4.6.5
Bend radius	4.7.2	4.6.6
Shielding effectiveness	4.7.3	4.6.7

4.4.1 Qualification test sample. In testing for qualification, a test sample consisting of a single length of conduit with ends treated as in 3.6.8 shall be submitted for each size and type that is to be qualified. The length of the test sample shall be 4 feet for conduit less than 2 inches in diameter, 6 feet for 2-inch and 2-1/2 diameter, and 8 feet for 3-inch diameter conduit.

4.4.2 Failures. One or more failures shall be cause for refusal to grant qualification approval.

4.4.3 Qualification of similar conduit. Qualification of a manufacturer's Type 2 conduit will automatically constitute qualification of that manufacturer's Type 1 conduit of the same size provided that the construction, manufacturing process, and materials (excluding the rubber jacket) are identical in both cases.

4.4.4 Retention of qualification. The Naval Sea Systems Command will request a certification report at 2-year intervals from each manufacturer whose conduit is listed on the QPL. To retain qualification, the manufacturer shall submit the certification signed by a responsible official of management attesting that the conduit listed on qualified parts list is still available from the listed plant; can be produced under the same conditions as originally qualified, i.e., same process, materials, construction, design, manufacturer's part number, or designation; and meets the requirements of the current specification. Failure to provide certification will be cause for removal from the QPL. After completion of certification review, the QPL will be reprinted to show the date of validation. (DD Form1718, Certification of Qualified Products, shall be used for obtaining certification.)

4.5 Quality conformance inspection. The supplier shall perform a quality conformance inspection at the time of production on each production lot (see 4.5.1) manufactured under this specification to prove compliance with applicable requirements. The quality conformance inspections shall be as specified in table IV, in the order shown.

4.5.1 Production lot. Conduit of one size and type, and manufactured from the same materials under essentially the same conditions during an identifiable production period, shall be considered a production lot. The manufacturer shall assign a lot number, for identification purposes, to each production lot.

4.6 Methods of inspection. Visual and dimensional inspections shall be made on each length of bare tubing and on the completed conduit in accordance with 4.6.1, 4.6.2, 4.6.3, and 4.6.4. Any defects or failure to meet the requirements specified in 3.6, 3.9, and 3.11 shall be corrected or shall be cause for rejection.

4.6.1 Visual inspection. Convoluted tubing shall be inspected prior to application of braid to verify that there are no gaps, cracks, breaks, or other defects in material, construction, or workmanship.

4.6.2 Dimensional inspection. Measurements shall be made on the conduit to determine compliance with dimensional requirements. Any dimension that is not within the specified tolerance shall be classified a defect.

4.6.3 Braid coverage. The coverage of the wire braid shall be determined by measuring at three widely separated areas of a length of conduit. The areas measured shall be representative of the entire braid. The diagram of figure 2 shows a typical section of braid, with a unit area having dimensions C and D. The uncovered portion of the unit area is shown by dimensions A and B. The percent of braid coverage shall be computed by using the formula below, and shall equal minimum of 90 percent.

$$\text{Percent of braid coverage} = 100(1-AB/CD)$$

Table IV. Quality conformance inspection.

Inspection	Requirement Paragraph	Test method Paragraph
Visual 1/	3.6, 3.9, 3.11	4.6.1
Dimensional 1/	3.6.1	4.6.2
Watertightness 1/	3.7.1	4.6.5
Visual 2/	3.6, 3.9, 3.11	4.6.1
Dimensional 2/	3.6.1	4.6.2
Braid coverage 2/	3.6.5	4.6.3
Tightness of covering 2/	3.6.6	4.6.4
Bend radius 3/	3.7.2	4.6.6
Shielding effectiveness 3/ 4/	3.7.3	4.6.7

1/ Inspection shall be performed on each length of bare tubing, prior to application of braid.
2/ Inspection shall be performed on each length of completed conduit, for both Type 1 and Type 2.
3/ Inspection shall be performed on one sample from each production lot.
4/ The production-lot shielding effectiveness test nee be conducted at only one frequency. The frequency selected is optional to the supplier but shall be a frequency between 30 and 100 Hz.

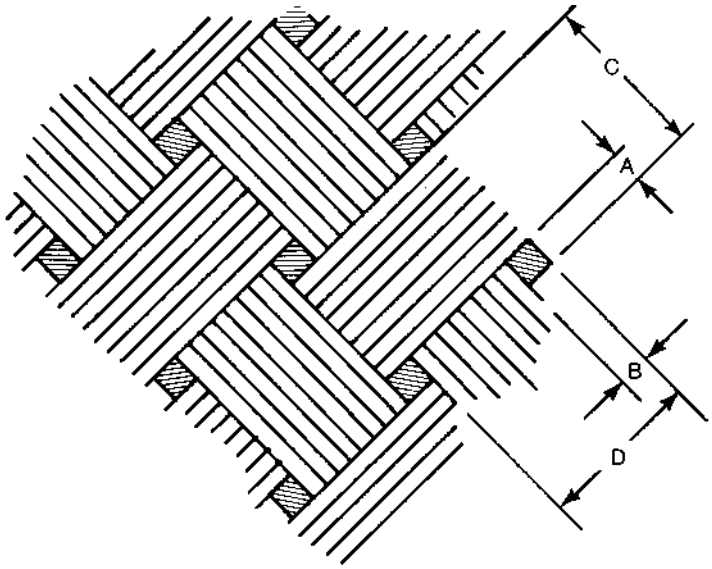

FIGURE 2. Typical braid section.

4.6.4 Tightness of covering. For Type 1 and Type 2 conduit the wire braid shall have a tight fit over the tubing. For Type 2 conduit the rubber jacket shall have a tight fit over the wire braid.

4.6.5 Watertightness. Watertight integrity shall be determined by a pressure test on bare tubing, i.e., conduit without braid and jacket coverings. This test shall be performed on each and every length manufactured under this specification. The tubing ends shall be capped and sealed. The capped tubing shall then be pressurized internally to 15 psig with air and fully immersed in water. There shall be no visible air leakage from the tubing.

4.6.6 Bend radius. The sample for the bend-radius test shall be 4 feet long for all conduit less than 2 inches in diameter, 6 feet long for 2-inch and 2-1/2 inch diameter, and 8 feet long for 3-inch diameter conduit. The braid ends shall be brazed to the tubing as in 3.6.8. Type 2 conduit samples shall be tested with their rubber jacket. One end of the sample shall be fastened tangentially to a cylindrical mandrel that is mounted with its axis horizontal. See figure 3a. The radius of the mandrel shall be as specified in table V. The conduit sample shall hang vertically, and the test load specified in table V shall be attached to its lower end. The mandrel shall be rotated 270 degrees to the position shown in figure 3b. The conduit shall be in contact with the mandrel over a typical 180-degree sector (see figure 3b.) Failure of the conduit to come within 1/16 inch of the mandrel at any point along its curvature over the 180-degree sector shall constitute cause for rejection.

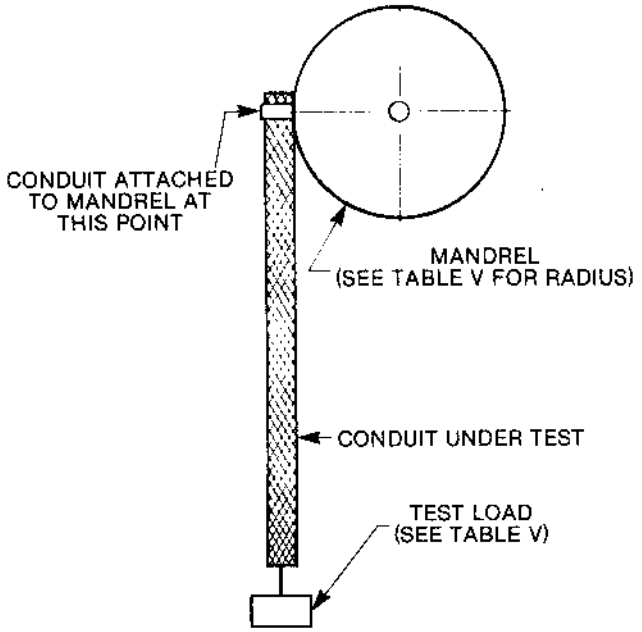

FIGURE 3a. Conduit at start of test.

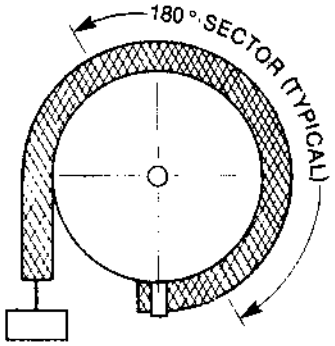

FIGURE 3b. Conduit after 270° mandrel rotation.

FIGURE 3. Bend-radius test setup.

TABLE V. Data for bend-radius test.

Conduit test sample			Test load		Mandrel radius (in.)
Size (in.) (nom ID)	Size code	Length (ft)	Type 1 conduit	Type 2 conduit	
1/4	02	4	1/2	1/2	1-1/4
3/8	03	4	1/2	1/2	2
1/2	04	4	1/2	1/2	2-1/2
5/8	05	4	1/2	1/2	3
3/4	06	4	1/2	1/2	3-3/4
1	08	4	1/2	1	5
1-1/4	10	4	1	1-1/2	6-1/4
1-1/2	12	4	1-1/2	2	7-1/2
2	16	6	2	2	10
2-1/2	20	6	3	3	12-1/2
3	24	8	5	5	15

4.6.7 Shielding effectiveness. After completion of the bend-radius test of 4.6.6, the sample, with braid ends brazed to the tubing as in 3.6.8, shall be subjected to two bend cycles, where one bend cycle entails bending the center section through a 90-degree arc over the mandrel of 4.6.6, straightening it, bending the center section 90 degrees in the opposite direction over the same mandrel and straightening it to complete the cycle. The sample shall then be tested for effectiveness of shielding against a transverse magnetic field having a field intensity of 1 oersted over the frequency range of 30 Hz to 30 kHz. The test method shall be in accordance with ANSI/ASTM-A-698, with the following exceptions:

a. The inside diameter of each Helmholtz coil section shall be 35cm.

b. The center section of the conduit shall be symmetrically positioned between coil sections with its axis in the plane of the coils and with its ends extending out straight and beyond the coil sections.

c. The pickup coil shall be designed to fit inside the long tubular shape of the conduit. The coil shall provide an adequate signal over the frequency range 30 Hz to 30 kHz. Figure 4 shows the design of such a coil with typical dimensions suitable for use with conduit as small as 1/4-inch size.

Note: Particular care should be taken to maintain the plane of the pickup parallel to the planes of the helmholtz coil sections. Steel end caps may be required on the test sample (particularly on the larger sizes) to preclude flux leakage into the open ends of the conduit.

4.7 Test reports. The supplier shall prepare a test report for each production lot (see 4.5.1). The test report shall include the following: the production lot number, a certification of materials inspection (see 4.3) which applies to the production lot, a certification that all of the conduit in the production lot is identical to a qualified test sample (see 4.4), and certification that each of the quality conformance inspections of 4.5 has been performed and any conduit that is defective, or fails to meet requirements, has been either corrected or rejected. All test reports shall be retained on file by the manufacturer of the conduit and shall be available for review for a period of 2 years following product fabrication. Test reports, in duplicate shall be furnished when required by the contract or order (see 6.2).

4.8 Quality assurance. All conduit manufactured under this specification shall be identical to qualified test samples. The conduit shall be subject to DCAS (Defense Contract Administration Service) inspection at source of shipment when specified by the contract or order (see 6.2).

5. PACKAGING

5.1 Cleaning. Any conduit produced to this specification shall be manufactured under processes which have sufficient quality control procedures to prevent contamination. However, and conduit not meeting the cleanliness requirement of 3.6.4 can be processed in accordance with MIL-P-116 process C1 in order to meet the requirements of 3.6.4. Any drying procedure shall not be injurious to the finished product.

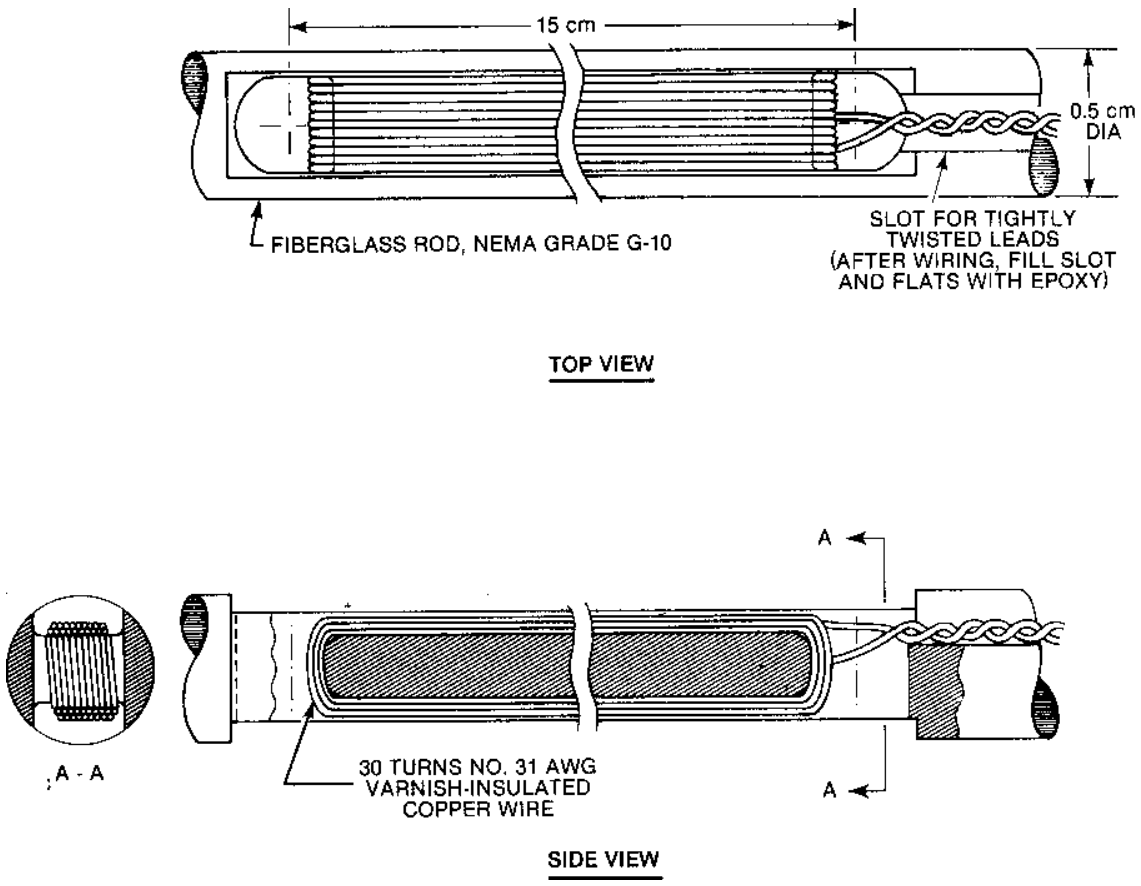

FIGURE 4. Typical pickup coil.

5.2 Preservatives. No preservatives, paints, or coatings shall be applied to the conduit. Conduit shall be sufficiently clean such that precleaning the conduit will not be necessary in order to obtain a good metal-to-metal contact between fitting and conduit.

5.3 Identification tags. Each length of conduit shall be separately labeled by means of metal tags to provide identification information for supply, installation, and repair personnel. These identification tags are in addition to the conduit markings of 3.9. The tags shall be imprinted with the following information:

a. EMI SHIELDING CONDUIT.

b. Conduit part number (see 1.2.2).

c. Manufacturer's name.

d. Production-lot number (see 4.5.1).

e. Date of Manufacture.

The metal tags shall imprinted using stamped, etched, or indelible lettering. One such tag shall be firmly attached near each end of each length of conduit. Attach tags over the braid of Type 1 conduit and over the jacket of Type 2 conduit.

5.4 Unit packaging. The brazed ends (see 3.6.8) of each length of conduit shall be capped to prevent entrance of foreign matter. Long lengths of conduit shall be furnished in coils or reels of sufficient diameter to prevent excessive bending of the conduit. Excessive bending is considered to be a bend radius less than 10 times the diameter of the conduit being coiled. Coils shall be securely tied in three or more places equidistantly spaced around the circumference of the coil.

5.5 Wrapping. Conduit shall be wrapped in rust preventive paper or sealed in a plastic bags, and packed in a manner that will ensure adequate protection of the conduit from physical chemical damage during shipment and during long-term storage in adverse environments.

5.6 Marking of shipping containers. Shipping containers shall bear the information in indelible lettering (reference MIL-STD-129):

a. EMI SHIELDING CONDUIT.

b. Part number (s) (see 1.2.2).

c. Length (s).

d. Manufacturer's name.

e. Manufacturer's part number (s).

f. Purchase order number.

g. Total weight.

h. Net weight.

Each container shall, in addition, be marked "HANDLE WITH CARE" and "DO NOT DROP."

6. NOTES

6.1 Intended use. The purpose of this conduit is to shield low-level signal cables from the influence of external magnetic fields. It can also be used, within saturation limits of the conduit material, to reduce magnetic field radiation from power and transmitting cables. The primary frequencies of interest are those below 100 kHz.

6.1.1 Type 1 conduit. Type 1 nonjacketed conduit is used in installations where ground or structureborne currents are minimal along the path of the conduit or where the cable being shielded is not susceptible to interference from current flow along the conduit. (Conduit can become a conductor for ground or structureborne currents through contacts with ground potentials along the length of the conduit.)

6.1.2 Type 2 conduit. Type 2 conduit is used for shielding an extremely low-level signal cable which would be susceptible to interference from current flowing along the conduit. The rubber jacket prevents this current flow by electrically insulating the conduit from unintentional ground contacts.

6.2 Ordering data. Procurement documents should specify the following:

a. Name of item: "Shielding conduit, per S9407-AB-HBK-010."

b. Type of conduit to be furnished (see 1.2.1).

c. Conduit size (nominal ID, see table I).

d. Conduit part number.

e. Length (s), and tolerances, if required.

f. Type of splice in rubber jacket (specify, if necessary, either overlap or butt joint, see 3.6.7).

g. Special marking, if required.

h. Certified test reports, if required (see 4.7).

i. DCAS inspection, if required (see 4.8).

6.3 Qualified products list. A qualified products list for flexible conduit for low frequency shielding is maintained for Navy procurement purposes. It provides information concerning flexible conduit which meets the requirements specified herein. Manufacturers wishing to have their product tested for qualification should send samples as set forth in 4.4.1, together with manufacturer's technical data as specified in 3.10, to Naval Undersea Warfare Center, Code 3431, Newport, RI 02841-1708. No indebtedness between the U.S. Government and any manufacturer will be incurred in connection with the qualification testing described herein. Samples sent for testing shall be sent prepaid by the manufacturer and will not be returned.

6.3.1 Qualification provisions. Conduit which is tested shall meet the requirements of this specification in order to be approved by Naval Sea Systems Command and added to the qualified products list. Listing of a product does not release the supplier from compliance with the specification requirements and connote endorsement of the product by the Navy. Information concerning this listing is available from the Naval Sea Systems Command, Code 05K2B, Arlington, VA 22242, telephone (703) 602-2549.

INDEX

	Paragragh	Page
Annealing of tubing material	3.5.2	D-3
Applicable documents	2	D-2
Bend radius	3.7.2, 4.6.6	D-6, D-10
Braid	3.6.5	D-5
Braid coverage	4.6.3	D-9
Braid material	3.5.4	D-4
Classification	1.2	D-1
Types	1.2.1	D-1
Conduit part number	1.2.2	D-1
Classification of inspection	4.2	D-7
Classification of requirements	3.1	D-3
Cleaning	5.1	D-12
Conduit part number	1.2.2	D-1
Design and construction	3.4	D-3
Dimensional inspection	4.6.2	D-9
Ends	3.6.8	D-6
Failures	4.4.2	D-8
Heat-shrinkable tubing	3.5.6	D-4
Identification tags	5.3	D-13
Inner surfaces	3.6.4	D-5
Intended use	6.1	D-14
Type 1 conduit	6.1.1	D-14
Type 2 conduit	6.1.2	D-14
Interchangeability	3.8	D-6
Issues of documents	2.1	D-2
Jacket material	3.5.5	D-4
Lengths	3.6.2	D-5
Manufacturer’s technical data	3.10	D-6
Marking	3.9	D-6
Marking of shipping containers	5.6	D-14
Materials	3.5	D-3
Tubing material	3.5.1	D-3
Annealing of tubing material	3.5.2	D-3
Seam interlock material	3.5.3	D-4
Braid material	3.5.4	D-4
Jacket material	3.5.5	D-4
Heat-shrinkable material	3.5.6	D-4
Materials inspection	4.3	D-7

INDEX

	Paragragh	Page
Methods of inspection	4.6	D-8
Visual inspection	4.6.1	D-9
Dimensional inspection	4.6.2	D-9
Braid coverage	4.6.3	D-9
Tightness of covering	4.6.4	D-10
Watertightness	3.7.1, 4.6.5	D-6, D-10
Bend radius	3.7.2, 4.6.6	D-6, D-10
Shielding effectiveness	3.7.3, 4.6.7	D-6, D-12
Notes	6	D-14
Ordering data	6.2	D-15
Other publications	2.2	D-2
Packaging	5	D-12
Performance characteristics	3.7	D-6
Watertightness	3.7.1	D-6
Bend radius	3.7.2	D-6
Shielding effectiveness	3.7.3	D-6
Physical characteristics	3.6	D-4
Sizes and dimensions	3.6.1	D-4
Lengths	3.6.2	D-5
Seams and joints	3.6.3	D-5
Inner surfaces	3.6.4	D-5
Braid	3.6.5	D-5
Rubber jacket	3.6.6	D-5
Splices	3.6.7	D-6
Ends	3.6.8	D-6
Qualification	3.2	D-3
Qualification inspection	4.4	D-7
Qualification test sample	4.4.1	D-8
Failures	4.4.2	D-8
Retention of qualifications	4.4.4	D-8
Qualification of similar conduit	4.4.3	D-8
Qualification provisions	6.3.1	D-15
Qualification test sample	4.4.1	D-8
Qualified products list	6.3	D-15
Qualification provisions	6.3.1	D-15
Quality assurance	4.8	D-12
Quality assurance provisions	4.	D-7
Quality conformance	3.3	D-3
Quality conformance inspection	4.5	D-8
Production lot	4.5.1	D-8
Requirements	3	D-3
Responsibility for inspection	4.1	D-7
Test equipment and inspection facilities	4.1.1	D-7
Retention of qualification	4.4.4	D-8

INDEX

	Paragragh	Page
Rubber jacket	3.6.6	D-5
Scope	1.,1.1	D-1
Seam interlock material	3.5.3	D-4
Seams and joints	3.6.3	D-5
Shielding effectiveness	3.7.3, 4.6.7	D-6, D-12
Sizes and dimensions	3.6.1	D-4
Splices	3.6.7	D-6
Test equipment and inspection facilities	4.1.1	D-7
Test reports	4.7	D-12
Tightness of covering	4.6.4	D-10
Tubing material	3.5.1	D-3
Types	1.2.1	D-1
Type 1 conduit	6.1.1	D-14
Type 2 conduit	6.1.2	D-14
Unit packaging	5.4	D-14
Visual inspection	4.6.1	D-9
Watertightness	3.7.1, 4.6.5	D-6, D-10
Workmanship	3.11	D-6
Wrapping	5.5	D-14

APPENDIX E

CABLE COMPARISON CHART

APPENDIX E

CABLE COMPARISON CHART

TABLE OF CONTENTS

Paragraph		Page
E-1	INTRODUCTION	E-1
E-2	INTENDED USE OF MIL-C-24640 CABLES	E-1

LIST OF TABLES

Table		Page
E-1	Cable Comparison Chart	E-2

APPENDIX E

CABLE COMPARISON CHART

E-1 INTRODUCTION

This cable comparison chart is presented for reference purposes. It compares the MIL-C-915 Shipboard cable types with its equivalent MIL-C-24643 Low-Smoke types, and also with its equivalent MIL-C-24640 Lightweight types.

Note that the slash numbers of the equivalent types do not agree with each other. For example, the equivalent for the TTOP type, MIL-C-915/24 is the Low-Smoke LSTTOP type, MIL-C-24643/12, and is the Lightweight TTX type, MIL-C-24640/4. Also note that the Low-Smoke version of the TTOP type is identified by LSTTOP. The letters "LS" precede the MIL-C-915 "TTOP" designation to indicate the Low-Smoke version. The Lightweight version of the TTOP type is TTX.

E-2 INTENDED USE OF MIL-C-24640 CABLES

The MIL-C-24640 Lightweight cables are not direct replacement conversions and shall not be used to replace existing MIL-C-915 or MIL-C-24643 cables. Overall diameters have been reduced and electrical characteristics have been changed.

Table E-1. Cable Comparison Chart

MIL-C-915		MIL-C-24643		MIL-C-24640	
Slash No.	Type	Slash No.	Type	Slash No.	Type
01	CVSF-4	01	LSCVSF-4		
02	OBSOLETE				
03	DCOP-1 DCOP-1-1/2 DCOP-2	02	LSDCOP-1 LSDCOP-1-1/2 LSDCOP-2		
03	TCOP-2	02	LSTCOP-2		
04	OBSOLETE				
05	DLT				
06	SHOF-3 SHOF-23 SHOF-60 SHOF-150 SHOF-200 SHOF-250 SHOF-500 SHOF-650 SHOF-800	03	LSSHOF-3 LSSHOF-23 LSSHOF-60 LSSHOF-150 LSSHOF-200 LSSHOF-250 LSSHOF-500 LSSHOF-650 LSSHOF-800		
06	DHOF-3 DHOF-4 DHOF-6 DHOF-9 DHOF-14 DHOF-23 DHOF-30 DHOF-83 DHOF-250 DHOF-400	03	LSDHOF-3 LSDHOF-4 LSDHOF-6 LSDHOF-9 LSDHOF-14 LSDHOF-23 LSDHOF-30 LSDHOF-83 LSDHOF-250 LSDHOF-400		
06	THOF-3 THOF-4 THOF-6 THOF-9 THOF-14 THOF-23 THOF-42 THOF-150 THOF-250 THOF-400 THOF-500 THOF-600	03	LSTHOF-3 LSTHOF-4 LSTHOF-6 LSTHOF-9 LSTHOF-14 LSTHOF-23 LSTHOF-42 LSTHOF-150 LSTHOF-250 LSTHOF-400 LSTHOF-500 LSTHOF-600		

Table E-1. Cable Comparison Chart (Continued)

MIL-C-915		MIL-C-24643		MIL-C-24640	
Slash No.	Type	Slash No.	Type	Slash No.	Type
06	FHOF-3 FHOF-4 FHOF-9 FHOF-42 FHOF-60 FHOF-133	03	LSFHOF-3 LSFHOF-4 LSFHOF-9 LSFHOF-42 LSFHOF-60 LSFHOF-133		
07	DSWS-4				
08	DSS-2 DSS-3 DSS-4				
08	TSS-2 TSS-3 TSS-4				
08	FSS-2 FSS-3 FSS-4				
08	7SS-2				
09	JAS				
10	MCSF-4				
11	MCOS-2 MCOS-4 MCOS-5 MCOS-6 MCOS-7	04	LSMCOS-2 LSMCOS-4 LSMCOS-5 LSMCOS-6 LSMCOS-7		
12	MDU-6 MDU-14 MDU-23 MDU-40 MDU-60	05	LSMDU-6 LSMDU-14 LSMDU-23 LSMDU-40 LSMDU-60		
13	MDY-6 MDY-14 MDY-23 MDY-40 MDY-60	06	LSMDY-6 LSMDY-14 LSMDY-23 LSMDY-40 LSMDY-60		

Table E-1. Cable Comparison Chart (Continued)

MIL-C-915		MIL-C-24643		MIL-C-24640	
Slash No.	Type	Slash No.	Type	Slash No.	Type
14	MHOF-7 MHOF-10 MHOF-14 MHOF-19 MHOF-24 MHOF-30 MHOF-37 MHOF-44 MHOF-61	07	LSMHOF-7 LSMHOF-10 LSMHOF-14 LSMHOF-19 LSMHOF-24 LSMHOF-30 LSMHOF-37 LSMHOF-44 LSMHOF-61		
15	MMOP-5	08	LSMMOP-5		
16	MRI-D-1 MRI-D-2-1/2	09	LSMRI-D-1 LSMRI-D-2-1/2		
16	MRI-T-2-1/2	09	LSMRI-T-2-1/2		
17	PBTMU-5 PBTMU-15 PBTMU-30	10	LSPBTMU-5 LSPBTMU-15 LSPBTMU-30		
17	PBTM-5 PBTM-15 PBTM-30	10	LSPBTMU-5 LSPBTMU-15 LSPBTMU-30		
18	SSF-300	11	LSSSF-300		
19	TPU-6				
20	TRF-105 TRF-133 TRF-168				
21	TRXF-84 TRXF-105 TRXF-133				
22	TSP-11 TSP-31				
22	TSPA-11 TSPA-31				
23	OBSOLETE				

Table E-1. Cable Comparison Chart (Continued)

MIL-C-915		MIL-C-24643		MIL-C-24640	
Slash No.	Type	Slash No.	Type	Slash No.	Type
24	TTOP-3	12	LSTTOP-3	04	TTX-3
	TTOP-5		LSTTOP-5		--
	TTOP-10		LSTTOP-10		--
	TTOP-15		LSTTOP-15	04	TTX-15
				04	TTXA-3
					TTXA-15
25	TTRS-2	13	LSTTRS-2	05	TTXS-2
	TTRS-4		LSTTRS-4		TTXS-4
	TTRS-6		LSTTRS-6		
	TTRS-8		LSTTRS-8		
	TTRS-10		LSTTRS-10		
	TTRS-12		LSTTRS-12		
	TTRS-16		LSTTRS-16		
25	TTRSA-2	13	LSTTRSA-2	05	TTXSA-2
	TTRSA-4		LSTTRSA-4		TTXSA-4
	TTRSA-6		LSTTRSA-6		
	TTRSA-8		LSTTRSA-8		
	TTRSA-10		LSTTRSA-10		
	TTRSA-12		LSTTRSA-12		
	TTRSA-16		LSTTRSA-16		
				05	TTXSA-2
					TTXSA-4
					TTXSA-8
					TTXSA-10
26	OBSOLETE				
27	OBSOLETE				
28	SSGU-50	14	LSSSGU-50		
	SSGU-75		LSSSGU-75		
	SSGU-100		LSSSGU-100		
	SSGU-200		LSSSGU-200		
	SSGU-300		LSSSGU-300		
	SSGU-400		LSSSGU-400		
	SSGU-650		LSSSGU-650		
	SSGU-800		LSSSGU-800		
	SSGU-1000		LSSSGU-1000		
	SSGU-1600		LSSSGU-1600		
	SSGU-2000		LSSSGU-2000		

Table E-1. Cable Comparison Chart (Continued)

MIL-C-915		MIL-C-24643		MIL-C-24640	
Slash No.	Type	Slash No.	Type	Slash No.	Type
28	SSGA-50	14	LSSSGA-50		
	SSGA-75		LSSSGA-75		
	SSGA-100		LSSSGA-100		
	SSGA-200		LSSSGA-200		
	SSGA-300		LSSSGA-300		
	SSGA-400		LSSSGA-400		
	SSGA-650		LSSSGA-650		
	SSGA-800		LSSSGA-800		
	SSGA-1000		LSSSGA-1000		
	SSGA-1600		LSSSGA-1600		
	SSGA-2000		LSSSGA-2000		
29	DSGU-3	15	LSDSGU-3	19	DXW-3
	DSGU-4		LSDSGU-4		DXW-4
	DSGU-9		LSDSGU-9		
	DSGU-14		LSDSGU-14		
	DSGU-23		LSDSGU-23		
	DSGU-50		LSDSGU-50		
	DSGU-75		LSDSGU-75		
	DSGU-100		LSDSGU-100		
	DSGU-200		LSDSGU-200		
	DSGU-300		LSDSGU-300		
	DSGU-400		LSDSGU-400		
29	DSGA-3	15	LSDSGA-3	19	DXWA-3
	DSGA-4		LSDSGA-4		DXWA-4
	DSGA-9		LSDSGA-9		
	DSGA-14		LSDSGA-14		
	DSGA-23		LSDSGA-23		
	DSGA-50		LSDSGA-50		
	DSGA-75		LSDSGA-75		
	DSGA-100		LSDSGA-100		
	DSGA-200		LSDSGA-200		
	DSGA-300		LSDSGA-300		
	DSGA-400		LSDSGA-400		

Table E-1. Cable Comparison Chart (Continued)

MIL-C-915		MIL-C-24643		MIL-C-24640	
Slash No.	Type	Slash No.	Type	Slash No.	Type
30	TSGU-3	16	LSTSGU-3	20	TXW-3
	TSGU-4		LSTSGU-4		TXW-4
	TSGU-9		LSTSGU-9		
	TSGU-14		LSTSGU-14		
	TSGU-23		LSTSGU-23		
	TSGU-50		LSTSGU-50		
	TSGU-75		LSTSGU-75		
	TSGU-100		LSTSGU-100		
	TSGU-150		LSTSGU-150		
	TSGU-200		LSTSGU-200		
	TSGU-300		LSTSGU-300		
	TSGU-400		LSTSGU-400		
30	TSGA-3	16	LSTSGA-3	20	TXWA-3
	TSGA-4		LSTSGA-4		TXWA-4
	TSGA-9		LSTSGA-9		
	TSGA-14		LSTSGA-14		
30	TSGA-23	16	LSTSGA-23		
	TSGA-50		LSTSGA-50		
	TSGA-75		LSTSGA-75		
	TSGA-100		LSTSGA-100		
	TSGA-150		LSTSGA-150		
	TSGA-200		LSTSGA-200		
	TSGA-300		LSTSGA-300		
	TSGA-400		LSTSGA-400		
31	FSGU-3	17	LSFSGU-3	21	FXW-3
	FSGU-4		LSFSGU-4		FXW-4
	FSGU-9		LSFSGU-9		
	FSGU-14		LSFSGU-14		
	FSGU-23		LSFSGU-23		
	FSGU-50		LSFSGU-50		
	FSGU-75		LSFSGU-75		
	FSGU-100		LSFSGU-100		
	FSGU-150		LSFSGU-150		
	FSGU-200		LSFSGU-200		
31	FSGA-3	17	LSFSGA-3	21	FXWA-3
	FSGA-4		LSFSGA-4		FXWA-4
	FSGA-9		LSFSGA-9		
	FSGA-14		LSFSGA-14		
	FSGA-23		LSFSGA-23		
	FSGA-50		LSFSGA-50		
	FSGA-75		LSFSGA-75		
	FSGA-100		LSFSGA-100		
	FSGA-150		LSFSGA-150		
	FSGA-200		LSFSGA-200		

Table E-1. Cable Comparison Chart (Continued)

MIL-C-915		MIL-C-24643		MIL-C-24640	
Slash No.	Type	Slash No.	Type	Slash No.	Type
32	MSCU-7	18	LSMSCU-7	23	MXCW-7
	MSCU-10		LSMSCU-10		MXCW-10
	MSCU-14		LSMSCU-14		MXCW-14
	MSCU-19		LSMSCU-19		MXCW-19
	MSCU-24		LSMSCU-24		MXCW-24
	MSCU-30		LSMSCU-30		MXCW-30
	MSCU-37		LSMSCU-37		MXCW-37
	MSCU-44		LSMSCU-44		MXCW-44
	MSCU-61		LSMSCU-61		MXCW-61
	MSCU-91		LSMSCU-91		
32	MSCA-7	18	LSMSCA-7	23	MXCWA-7
	MSCA-10		LSMSCA-10		MXCWA-10
	MSCA-14		LSMSCA-14		MXCWA-14
	MSCA-19		LSMSCA-19		MXCWA-19
	MSCA-24		LSMSCA-24		MXCWA-24
	MSCA-30		LSMSCA-30		MXCWA-30
	MSCA-37		LSMSCA-37		MXCWA-37
	MSCA-44		LSMSCA-44		MXCWA-44
	MSCA-61		LSMSCA-61		MXCWA-61
	MSCA-91		LSMSCA-91		
32	MSCS-7	18	LSMSCS-7	23	MXCOW-7
	MSCS-10		LSMSCS-10		MXCOW-10
	MSCS-14		LSMSCS-14		MXCOW-14
	MSCS-19		LSMSCS-19		MXCOW-19
	MSCS-24		LSMSCS-24		MXCOW-24
	MSCS-30		LSMSCS-30		MXCOW-30
	MSCS-37		LSMSCS-37		MXCOW-37
	MSCS-44		LSMSCS-44		MXCOW-44
	MSCS-61		LSMSCS-61		MXCOW-61
	MSCS-91		LSMSCS-91		
33	6SGU-100	19	LS6SGU-100		
	6SGU-125		LS6SGU-125		
	6SGU-150		LS6SGU-150		
	6SGU-200		LS6SGU-200		
33	6SGA-100	19	LS6SGA-100	21	FXWA-3
	6SGA-125		LS6SGA-125		FXWA-4
	6SGA-150		LS6SGA-150		
	6SGA-200		LS6SGA-200		
34	7SGU-3	20	LS7SGU-3	22	7XW-3
	7SGU-4		LS7SGU-4		7XW-4

Table E-1. Cable Comparison Chart (Continued)

MIL-C-915		MIL-C-24643		MIL-C-24640	
Slash No.	Type	Slash No.	Type	Slash No.	Type
34	7SGA-3 7SGA-4	20	LS7SGA-3 LS7SGA-4	22	7XWA-3 7XWA-4
35	TCJU-4	21	LSTCJU-4		
35	TCJA-4	21	LSTCJA-4		
35	TCTU-4	21	LSTCTU-4		
35	TCTA-4	21	LSTCTA-4		
36	5KVTSGU-100 5KVTSGU-150 5KVTSGU-250 5KVTSGU-350 5KVTSGU-400	22	LS5KVTSGU-100 LS5KVTSGU-150 LS5KVTSGU-250 LS5KVTSGU-350 LS5KVTSGU-400		
36	5KVTSGA-100 5KVTSGA-150 5KVTSGA-250 5KVTSGA-350 5KVTSGA-400	22	LS5KVTSGA-100 LS5KVTSGA-150 LS5KVTSGA-250 LS5KVTSGA-350 LS5KVTSGA-400		
37	TTSU-1-1/2 TTSU-3 TTSU-5 TTSU-10 TTSU-15 TTSU-20 TTSU-30 TTSU-40 TTSU-60	23	LSTTSU-1-1/2 LSTTSU-3 LSTTSU-5 LSTTSU-10 LSTTSU-15 LSTTSU-20 LSTTSU-30 LSTTSU-40 LSTTSU-60	24	TTXW-1-1/2 TTXW-3 TTXW-5 TTXW-10 TTXW-15 TTXW-20 TTXW-30 TTXW-40
37	TTSA-1-1/2 TTSA-3 TTSA-5 TTSA-10 TTSA-15 TTSA-20 TTSA-30 TTSA-40 TTSA-60	23	LSTTSA-1-1/2 LSTTSA-3 LSTTSA-5 LSTTSA-10 LSTTSA-15 LSTTSA-20 LSTTSA-30 LSTTSA-40 LSTTSA-60	24	TTXWA-1-1/2 TTXWA-3 TTXWA-5 TTXWA-10 TTXWA-15 TTXWA-20 TTXWA-30 TTXWA-40
				24	TTXOW-1-1/2 TTXOW-3 TTXOW-5 -- TTXOW-15 TTXOW-20 TTXOW-30 TTXOW-40

Table E-1. Cable Comparison Chart (Continued)

MIL-C-915		MIL-C-24643		MIL-C-24640	
Slash No.	Type	Slash No.	Type	Slash No.	Type
38	TCJX-3 TCJX-7 TCJX-12	24	LSTCJX-3 LSTCJX-7 LSTCJX-12		
38	TCKX-1 TCKX-3 TCKX-7 TCKX-12	24	LSTTCKX-1 LSTTCKX-3 LSTTCKX-7 LSTTCKX-12		
38	TCTX-1 TCTX-3 TCTS-7 TCTX-12	24	LSTTCTX-1 LSTTCTX-3 LSTTCTX-7 LSTTCTX-12		
39	PI-3 PI-7 PI-12	25	LSPI-3 LSPI-7 LSPI-12		
40	DPS-3 DPS-4 DPS-6 DPS-9	26	LSDPS-3 LSDPS-4 LSDPS-6 LSDPS-14		
40	TPS-3 TPS-4 TPS-6 TPS-9 TPS-14 TPS-30	26	LSTPS-3 LSTPS-4 LSTPS-6 LSTPS-9 LSTPS-14 LSTPS-30		
40	FPS-14	26	LSFPS-14		
40	7PS-6	26	LS7PS-6		
41	2AU-40	27	LS2AU-40		
41	2A-40	27	LS2A-40		
				06	2XAO-2 2XAO-7 2XAO-10 2XAO-18 2XAO-40
41	2AUS-40	27	LS22AUS-40		

Table E-1. Cable Comparison Chart (Continued)

MIL-C-915		MIL-C-24643		MIL-C-24640	
Slash No.	Type	Slash No.	Type	Slash No.	Type
42	1S50MU-16	28	LS1S50MU-16		
	1S50MU-20		LS1S50MU-20		
	1S50MU-40		LS1S50MU-40		
	1S50MU-70		LS1S50MU-70		
42	1S50MA-16	28	LS1S50MA-16		
	1S50MA-20		LS1S50MA-20		
	1S50MA-40		LS1S50MA-40		
	1S50MA-70		LS1S50MA-70		
				07	1XMSO-7
42	1S50MUS-16	28	LS1S50MUS-16		1XMSO-16
	1S50MUS-20		LS1S50MUS-20		--
	1S50MUS-40		LS1S50MUS-40		--
	1S50MUS-70		LS1S50MUS-70		1XMSO-70
43	MU-14	29	LSMU-14		
43	MA-14	29	LSMA-14		
				08	MXO-10
43	MUS-14	29	LSMUS-14		MXO-14
44	1SWU-2	30	LS1SWU-2		
	1SWU-14		LS1SWU-14		
	1SWU-20		LS1SWU-20		
	1SWU-30		LS1SWU-30		
44	1SWA-2	30	LS1SWA-2		
	1SWA-14		LS1SWA-14		
	1SWA-20		LS1SWA-20		
	1SWA-30		LS1SWA-30		
				14	1XSOW-2
					1XSOW-14
					1XSOW-20
					1XSOW-30
				09	2XS-2
45	2SU-3	31	LS2SU-3		2XS-3
	2SU-7		LS2SU-7		2XS-7
	2SU-10		LS2SU-10		2XS-10
	2SU-14		LS2SU-14		2XS-14
	2SU-19		LS2SU-19		2XS-19
	2SU-24		LS2SU-24		2XS-24
	2SU-30		LS2SU-30		2XS-30
	2SU-37		LS2SU-37		
	2SU-44		LS2SU-44		
	2SU-61		LS2SU-61		

Table E-1. Cable Comparison Chart (Continued)

MIL-C-915		MIL-C-24643		MIL-C-24640	
Slash No.	Type	Slash No.	Type	Slash No.	Type
45	2SA-3	31	LS2SA-3	09	2XSA-2
	2SA-7		LS2SA-7		2XSA-3
	2SA-10		LS2SA-10		2XSA-7
	2SA-14		LS2SA-14		2XSA-10
	2SA-19		LS2SA-19		2XSA-14
	2SA-24		LS2SA-24		2XSA-19
	2SA-30		LS2SA-30		2XSA-24
	2SA-37		LS2SA-37		2XSA-30
	2SA-44		LS2SA-44		
	2SA-61		LS2SA-61		
45	2SUS-3	31	LS2SUS-3	09	2XSA-2
	2SUS-7		LS2SUS-7		2XSA-3
	2SUS-10		LS2SUS-10		2XSA-7
	2SUS-14		LS2SUS-14		2XSA-10
	2SUS-19		LS2SUS-19		2XSA-14
	2SUS-24		LS2SUS-24		2XSA-19
	2SUS-30		LS2SUS-30		--
	2SUS-37		LS2SUS-37		2XSA-30
	2SUS-44		LS2SUS-44		
	2SUS-61		LS2SUS-61		
46	2SWAU-3	32	LS2SWAU-3	15	2XSAW-3
	2SWAU-7		LS2SWAU-7		2XSAW-7
	2SWAU-10		LS2SWAU-10		--
	2SWAU-14		LS2SWAU-14		2XSAW-14
	2SWAU-19		LS2SWAU-19		
	2SWAU-24		LS2SWAU-24		
	2SWAU-30		LS2SWAU-30		
	2SWAU-37		LS2SWAU-37		
	2SWAU-44		LS2SWAU-44		
	2SWAU-61		LS2SWAU-61		
46	2SWA-3	32	LS2SWA-3	15	2XSAWA-3
	2SWA-7		LS2SWA-7		2XSAWA-7
	2SWA-10		LS2SWA-10		--
	2SWA-14		LS2SWA-14		2XSAWA-14
	2SWA-19		LS2SWA-19		
	2SWA-24		LS2SWA-24		
	2SWA-30		LS2SWA-30		
	2SWA-37		LS2SWA-37		
	2SWA-44		LS2SWA-44		
	2SWA-61		LS2SWA-61		
				15	2XSAOW-3
					2XSAOW-7
					2XSAOW-10
					2XSAOW-14
					2XSAOW-19
					2XSAOW-24
					2XSAOW-30
					2XSAOW-37

Table E-1. Cable Comparison Chart (Continued)

MIL-C-915		MIL-C-24643		MIL-C-24640	
Slash No.	Type	Slash No.	Type	Slash No.	Type
47	1SWF-2				
48	2SWF-3 2SWF-4 2SWF-7 2SWF-24				
49	2SWU-1 2SWU-3 2SWU-7 2SWU-12 2SWU-19 2SWU-24	33	LS2SWU-1 LS2SWU-3 LS2SWU-7 LS2SWU-12 LS2SWU-19 LS2SWU-24	16	2XSW-1 2XSW-3 2XSW-7
49	2SWU-30 2SWU-37 2SWU-61	33	LS2SWU-30 LS2SWU-37 LS2SWU-61		
49	2SWUA-1 2SWUA-3 2SWUA-7 2SWUA-12 2SWUA-19 2SWUA-24 2SWUA-30 2SWUA-37 2SWUA-61	33	LS2SWUA-1 LS2SWUA-3 LS2SWUA-7 LS2SWUA-12 LS2SWUA-19 LS2SWUA-24 LS2SWUA-30 LS2SWUA-37 LS2SWUA-61	16	2XSWA-1 2XSWA-3 2XSWA-7
				16	2XSOW-3 2XSOW-7 2XSOW-12 2XSOW-19 2XSOW-30
50	MS-37	34	LSMS-37		
50	MSA-37	34	LSMSA-37		
				10	MXSO-2 MSXO-9 MSXO-21 MSXO-37
51	3SU-3 3SU-7 3SU-10 3SU-14 3SU-19 3SU-24 3SU-30 3SU-37 3SU-44	35	LS3SU-3 LS3SU-7 LS3SU-10 LS3SU-14 LS3SU-19 LS3SU-24 LS3SU-30 LS3SU-37 LS3SU-44	11	3XS-7

Table E-1. Cable Comparison Chart (Continued)

MIL-C-915		MIL-C-24643		MIL-C-24640	
Slash No.	Type	Slash No.	Type	Slash No.	Type
51	3SA-3	35	LS3SA-3		
	3SA-7		LS3SA-7	11	3XSA-7
	3SA-10		LS3SA-10		
	3SA-14		LS3SA-14		
	3SA-19		LS3SA-19		
	3SA-24		LS3SA-24		
	3SA-30		LS3SA-30		
	3SA-37		LS3SA-37		
	3SA-44		LS3SA-44		
51	3SUS-3	35	LS3SUS-3		
	3SUS-7		LS3SUS-7		
	3SUS-10		LS3SUS-10		
	3SUS-14		LS3SUS-14		
	3SUS-19		LS3SUS-19		
	3SUS-24		LS3SUS-24		
	3SUS-30		LS3SUS-30		
	3SUS-37		LS3SUS-37		
	3SUS-44		LS3SUS-44		
52	3SWU-3	36	LS3SWU-3	18	3XSW-3
	3SWU-7		LS3SWU-7		3XSW-7
	3SWU-10		LS3SWU-10		3XSW-10
	3SWU-14		LS3SWU-14		3XSW-14
	3SWU-19		LS3SWU-19		
	3SWU-24		LS3SWU-24		
	3SWU-30		LS3SWU-30		
	3SWU-37		LS3SWU-37		
	3SWU-44		LS3SWU-44		
52	3SWA-3	36	LS3SWA-3	18	3XSWA-3
	3SWA-7		LS3SWA-7		3XSWA-7
	3SWA-10		LS3SWA-10		3XSWA-10
	3SWA-14		LS3SWA-14		3XSWA-14
	3SWA-19		LS3SWA-19		
	3SWA-24		LS3SWA-24		
	3SWA-30		LS3SWA-30		
	3SWA-37		LS3SWA-37		
	3SWA-44		LS3SWA-44		
52	3SWUS-3	36	LS3SWUS-3	18	3XSOW-3
	3SWUS-7		LS3SWUS-7		3XSOW-7
	3SWUS-10		LS3SWUS-10		3XSOW-12
	3SWUS-14		LS3SWUS-14		3XSOW-19
	3SWUS-19		LS3SWUS-19		3XSOW-30
	3SWUS-24		LS3SWUS-24		
	3SWUS-30		LS3SWUS-30		
	3SWUS-37		LS3SWUS-37		
	3SWUS-44		LS3SWUS-44		
53	3SU-3	37	LS3SU-3		
	3SU-7		LS3SU-7		
	3SU-12		LS3SU-12		

Table E-1. Cable Comparison Chart (Continued)

MIL-C-915		MIL-C-24643		MIL-C-24640	
Slash No.	Type	Slash No.	Type	Slash No.	Type
53	3UA-3 3UA-7 3UA-12	37	LS3UA-3 LS3UA-7 LS3UA-12		
54	ECM	38	LSECM		
54	ECMA	38	LSECMA		
55	1S75MU-8	39	LS1S75MU-8		
55	1S75MA-8	39	LS1S75MA-8		
56	1SMU-5	40	LS1SMU-5		
56	1SMA-5	40	LS1SMA-5		
57	1SAU-44	41	LS1SAU-44		
57	1SA-44	41	LS1SA-44		
58	MWF-7 MWF-10 MWF-14 MWF-19 MWF-24 MWF-30 MWF-37				
59	1SU-36 1SU-60	42	LS1SU-36 LS1SU-60		
59	1SUA-36 1SUA-60	42	LS1SUA-36 LS1SUA-60		
60	2SJ-22 2SJ-20 2SJ-18 2SJ-16 2SJ-14 2SJ-12 2SJ-11 2SJ-9 2SJ-7	43	LS2SJ-22 LS2SJ-20 LS2SJ-18 LS2SJ-16 LS2SJ-14 LS2SJ-12 LS2SJ-11 LS2SJ-9 LS2SJ-7		
60	3SJ-22 3SJ-20 3SJ-18 3SJ-16 3SJ-14 3SJ-12 3SJ-11 3SJ-9	43	LS3SJ-22 LS3SJ-20 LS3SJ-18 LS3SJ-16 LS3SJ-14 LS3SJ-12 LS3SJ-11 LS3SJ-9		
60	4SJ-20 4SJ-16 4SJ-14	43	LS4SJ-20 LS4SJ-16 LS4SJ-14		

Table E-1. Cable Comparison Chart (Continued)

MIL-C-915		MIL-C-24643		MIL-C-24640	
Slash No.	Type	Slash No.	Type	Slash No.	Type
60	2SJA-22	43	LS2SJA-22		
	2SJA-20		LS2SJA-20		
	2SJA-18		LS2SJA-18		
	2SJA-16		LS2SJA-16		
	2SJA-14		LS2SJA-14		
	2SJA-12		LS2SJA-12		
	2SJA-11		LS2SJA-11		
	2SJA-9		LS2SJA-9		
	2SJA-7		LS2SJA-7		
60	3SJA-22	43	LS3SJA-22		
	3SJA-20		LS3SJA-20		
	3SJA-18		LS3SJA-18		
	3SJA-16		LS3SJA-16		
	3SJA-14		LS3SJA-14		
	3SJA-12		LS3SJA-12		
	3SJA-11		LS3SJA-11		
	3SJA-9		LS3SJA-9		
60	4SJA-20	43	LS4SJA-20		
	4SJA-16		LS4SJA-16		
	4SJA-14		LS4SJA-14		
61	2S2				
62	3SF-7	44	LS3SF-7		
63	2U-10	45	LS2U-10		
	2U-15		LS2U-15		
	2U-19		LS2U-19		
	2U-30		LS2U-30		
	2U-45		LS2U-45		
	2U-60		LS2U-60		
63	2UA-10	45	LS2UA-10		
	2UA-15		LS2UA-15		
	2UA-19		LS2UA-19		
	2UA-30		LS2UA-30		
	2UA-45		LS2UA-45		
	2UA-60		LS2UA-60		
				12	2XO-6
					2XO-18
					2XO-24
					2XO-42
					2XO-60
					2XO-77
				17	2XOW-6
					2XOW-18
					2XOW-24
					2XOW-42
					2XOW-60
					2XOW-77

Table E-1. Cable Comparison Chart (Continued)

MIL-C-915		MIL-C-24643		MIL-C-24640	
Slash No.	Type	Slash No.	Type	Slash No.	Type
64	2WAU-40	46	LS2WAU-40		
64	2WA-40	46	LS2WA-40		
65	1SMWU-70	47	LS1SMWU-70		
65	1SMWA-70	47	LS1SMWA-70		
66	MSPW				
67	MSP				
68	DNW-3	48	LSDNW-3	01	DX-3
	DNW-4		LSDNW-4		DX-4
	DNW-9		LSDNW-9		
	DNW-14		LSDNW-14		
	DNW-23		LSDNW-23		
	DNW-50		LSDNW-50		
	DNW-75		LSDNW-75		
	DNW-100		LSDNW-100		
68	DNWA-3	48	LSDNWA-3	01	DXA-3
	DNWA-4		LSDNWA-4		DXA-4
	DNWA-9		LSDNWA-9		
	DNWA-14		LSDNWA-14		
	DNWA-23		LSDNWA-23		
	DNWA-50		LSDNWA-50		
	DNWA-75		LSDNWA-75		
	DNWA-100		LSDNWA-100		
69	TNW-3	49	LSTNW-3	02	TX-3
	TNW-4		LSTNW-4		TX-4
	TNW-9		LSTNW-9		
	TNW-14		LSTNW-14		
	TNW-23		LSTNW-23		
	TNW-50		LSTNW-50		
	TNW-75		LSTNW-75		
	TNW-100		LSTNW-100		
69	TNWA-3	49	LSTNWA-3	02	TXA-3
	TNWA-4		LSTNWA-4		TXA-4
	TNWA-9		LSTNWA-9		
	TNWA-14		LSTNWA-14		
	TNWA-23		LSTNWA-23		
	TNWA-50		LSTNWA-50		
	TNWA-75		LSTNWA-75		
	TNWA-100		LSTNWA-100		
70	FNW-3	50	LSFNW-3	03	FX-3
	FNW-4		LSFNW-4		FX-4
	FNW-9		LSFNW-9		
	FNW-23		LSFNW-23		
70	FNWA-3	50	LSFNWA-3	03	FXA-3
	FNWA-4		LSFNWA-4		FXA-4
	FNWA-9		LSFNWA-9		
	FNWA-23		LSFNWA-23		

Table E-1. Cable Comparison Chart (Continued)

MIL-C-915		MIL-C-24643		MIL-C-24640	
Slash No.	Type	Slash No.	Type	Slash No.	Type
71	MNW-7	51	LSMNW-7		
	MNW-10		LSMNW-10		
	MNW-14		LSMNW-14		
	MNW-19		LSMNW-19		
	MNW-24		LSMNW-24		
	MNW-30		LSMNW-30		
	MNW-37		LSMNW-37		
	MNW-44		LSMNW-44		
71	MNWA-7	51	LSMNWA-7		
	MNWA-10		LSMNWA-10		
	MNWA-14		LSMNWA-14		
	MNWA-19		LSMNWA-19		
	MNWA-24		LSMNWA-24		
	MNWA-30		LSMNWA-30		
	MNWA-37		LSMNWA-37		
	MNWA-44		LSMNWA-44		
72	TPNW-1-1/2	52	LSTPNW-1-1/2		
	TPNW-3		LSTPNW-3		
	TPNW-5		LSTPNW-5		
	TPNW-10		LSTPNW-10		
	TPNW-15		LSTPNW-15		
	TPNW-20		LSTPNW-20		
	TPNW-30		LSTPNW-30		
	TPNW-40		LSTPNW-40		
72	TPNWA-1-1/2	52	LSTPNWA-1-1/2		
	TPNWA-3		LSTPNWA-3		
	TPNWA-5		LSTPNWA-5		
	TPNWA-10		LSTPNWA-10		
	TPNWA-15		LSTPNWA-15		
	TPNWA-20		LSTPNWA-20		
	TPNWA-30		LSTPNWA-30		
	TPNWA-40		LSTPNWA-40		
73	SRW	53	LSSRW		
73	SRWA	53	LSSRWA		
73	DRW	53	LSDRW		
73	DRWA	53	LSDRWA		
73	TRW	53	LSTRW		
73	TRWA	53	LSTRWA		
74	5SS				
75	8NW6	54	LS8NW6		
75	8NWA6	54	LS8NWA6		
76	4NW8	55	LS4NW8		
76	4NWA8	55	LS4NWA8		
77	2SWL-7	56	LSSWL-7		
77	2SWLA-7	56	LS2SWLA-7		

Table E-1. Cable Comparison Chart (Continued)

MIL-C-915		MIL-C-24643		MIL-C-24640	
Slash No.	Type	Slash No.	Type	Slash No.	Type
78	2UW-42	57	LS2UW-42		
78	2UWA-42	57	LS2UWA-42		
78	2UWS-42	57	LS2UWS-42		
79	TPUM-6				
80	2CS-6 2CS-18 2CS-42 2CS-60 2CS-77	58	LS2CS-6 LS2CS-18 LS2CS-42 LS2CS-60 LS2CS-77		
81	1PR-A2OE				
82	1PR-16				
83	7PR-16				
84	2SPR-16				
85	3PR-16				
86	1Q-16				
87	1TR-16				
88	7SPR-16S				
89	1SPR-16				
				13	2XSXO-4

APPENDIX F

GUIDELINES FOR CABLE SPACING AND SHIELDING REQUIREMENTS IN THE PRESENCE OF DC GENERATING COILS

APPENDIX F

GUIDELINES FOR CABLE SPACING AND SHIELDING REQUIREMENTS IN THE PRESENCE OF DC GENERATING COILS

TABLE OF CONTENTS

Paragraph		Page
F-1	INTRODUCTION	F-1
F-2	SCOPE	F-1
F-3	CABLE CATEGORIZATION WITH DC FIELDS	F-1
F-4	DISTANCE FROM DC GENERATING COILS	F-2
F-5	CABLE LABELING	F-3

LIST OF TABLES

Table		Page
F-1	Conduit On One Cable	F-1
F-2	Conduit On Both Cables	F-2
F-3	Minimum Required Spacing From dc Generating Coils	F-2

APPENDIX F

GUIDELINES FOR CABLE SPACING AND SHIELDING REQUIREMENTS IN THE PRESENCE OF DC GENERATING COILS

F-1 INTRODUCTION

Black iron pipe and highly permeable flexible shielding conduit is used in many shipboard cable installations to reduce the likelihood of electromagnetic interference (EMI). Section 6 of this document gives information regarding the application of shielding and spacing requirements in wireway design.

Concern has been raised over the effects that dc generating coils have on the shielding and spacing requirements of Section 6. These fields can be as high as 20 gauss. Test results have shown that the ac shielding effectiveness of flexible shielding conduit (Section 3) is reduced when subjected to dc magnetic fields. These tests have also shown that there is no significant reduction in the ac shielding effectiveness of black iron pipe (Section 2) when it is subjected to dc magnetic fields.

F-2 SCOPE

This section describes shielding and spacing requirements for platforms which contain dc generating coils. These requirements are in addition to the Section 6 shielding and spacing requirements. These requirements are to be used when flexible shielding conduit is used, they do not apply when black iron pipe is used. The requirements in this section deal only with cables shielded with flexible shielding conduit.

F-3 CABLE CATEGORIZATION WITH DC FIELDS

When only one cable (either the radiator or the susceptor) is shielded with flexible shielding conduit the susceptor group number for S1, S2 and S4 type cables will be reduced by one group. Table F1 indicates this change and provides an example. When both cables (susceptor and radiator) are shielded with flexible shielding conduit the susceptor group number for S1, S2, and S4 type cables will be reduced by two groups. Table F-2 indicates this change and provides an example. Once the modified susceptor category has been determined, the spacing and shielding requirements can be obtained by using the procedures described in Section 6.

Table F-1. Conduit On One Cable

Cable/Conduit Categorization	Categorization with DC Fields
S1-X	S1-(X-1)
S2-X	S2-(X-1)
S4-X	S4-(X-1)
Example: S4-4	S4-3

Table F-2. Conduit On Both Cables

Cable/Conduit Categorization	Categorization with DC Fields
S1-X	S1-(X-2)
S2-X	S2-(X-2)
S4-X	S4-(X-2)
Example: S4-4	S4-2

F-4 DISTANCE FROM DC GENERATING COILS

When attempting to run cables in flexible shielding conduit close to dc generating coils a minimum spacing requirement shall be met. This must be done in order to ensure that the maximum dc magnetic field levels remain at or below 20 gauss. Table F-3 indicates the minimum spacing from dc generating coils needed to ensure that the dc magnetic fields do not exceed 20 gauss. These spacing requirements are in addition to the requirements of table F-1, table F-2, and Section 6.

Table F-3. Minimum Required Spacing From dc Generating Coils

NI (ampere-turns)	Minimum Distance (inches)
1000	4.0
750	3.0
500	2.0
250	1.0

For ampere-turn values different from those listed in table F-3 the equation shown below should be used to determine actual spacing requirements:

$$\mathbf{r = (0.004)NI \text{ inches}}$$

where: I = Current in amps
N = Number of turns

F-5 CABLE LABELING

All cables which have had their categorization changed due to the conditions listed in appendix F shall be identified by adding the letter “D” to the cable designator as shown in examples 1 through 4.

EXAMPLE	PREVIOUS DESIGNATOR	MODIFIED DESIGNATOR
1	(S1-4)	(S1-3D)
2	(S4-2)	(S4-1D)
3	(S4-3S)	(S4-2SD)
4	(R1-4/R7-2)	(R1-4/R7-1)D
5	(S4-2/R2-3)S	(S4-1/R2-3)SD

Only cables that have had their categorization changed due to the conditions listed in appendix F require the additional “D” designation.

DISTRIBUTION LIST

S9407-AB-010, Current List

EXTERNAL DISTRIBUTION LIST
FOR
NAVSEA HANDBOOK S9407-AB-HBK-010, Revision 2
NAVSEA, WASHINGTON, DC

CHIEF OF NAVAL OPERATIONS
CODE N872E4, N61F

COMMANDER IN CHIEF, U S ATLANTIC FLEET
CODE NFM2, N431

COMMANDER IN CHIEF, U S PACIFIC FLEET
CODE N4315

COMMANDER, NAVAL AIR FORCE, U S ATLANTIC FLEET
CODE 511.C

COMMANDER, NAVAL AIR FORCE, U S PACIFIC FLEET
CODE 736

FLEET TECHNICAL SUPPORT CENTER, ATLANTIC
CODE 4231

FLEET TECHNICAL SUPPORT CENTER ATLANTIC DET, GROTON CT

FLEET TECHNICAL SUPPORT CENTER ATLANTIC DET, MAYPORT FL

FLEET TECHNICAL SUPPORT CENTER, PACIFIC

FLEET TECHNICAL SUPPORT CENTER PACIFIC DET, PEARL HARBOR

FLEET TECHNICAL SUPPORT CENTER PACIFIC DET, YOKOSUKA JAPAN

COMMANDER, NAVAL SURFACE FORCE U S ATLANTIC FLEET
CODE N443, C63C4

COMMANDER, NAVAL SURFACE FORCE U S PACIFIC FLEET
CODE N432

COMMANDER, NAVAL AIR SYSTEMS COMMAND
CODE 5161

COMMANDER, SPACE AND NAVAL WARFARE SYSTEMS COMMAND
CODE 2243A, PMW 151-23

NAVAL SEA SYSTEMS COMMAND SUBMEPP ACTIVITY PORTSMOUTH NH
CODE 1823.3

NISE EAST CHARLESTON
CODE 323

NAVAL UNDERSEA WARFARE CENTER DIV NEWPORT
CODE 3431

COMMANDER, SUBMARINE FORCE, U S ATLANTIC FLEET
CODE N422

COMMANDER, SUBMARINE FORCE, U S PACIFIC FLEET
CODE 403

COMMANDER, SUBMARINE SQUADRON 1

COMMANDER, SUBMARINE SQUADRON 2

COMMANDER, SUBMARINE SQUADRON 6

COMMANDER, SUBMARINE SQUADRON 7

COMMANDER, SUBMARINE SQUADRON 8

COMMANDER, SUBMARINE SQUADRON 11

COMMANDER, SUBMARINE SQUADRON 12

COMMANDER, SUBMARINE SQUADRON 17

COMMANDER, SUBMARINE SQUADRON 20

COMMANDER, SUBMARINE DEVELOPMENT SQUADRON 12

COMMANDER, SUBMARINE GROUP 2

NAVAL SUBMARINE SCHOOL, GROTON CT
CODE 40

TRIDENT TRAINING FACILITY, BANGOR, WA
CODE 01A31

TRIDENT REFIT FACILITY, KINGS BAY, GA
CODE 424

COMMANDER, OPERATIONAL TEST AND EVALUATION FORCE

U S NAVAL SHIP REPAIR FACILITY, GUAM
CODE 290

U S NAVAL SHIP REPAIR FACILITY, YOKOSUKA JAPAN
R4 DIVISION

NORFOLK NAVAL SHIPYARD
CODE 272, 293
SHOP 51, BLDG 510 (SURFACE PLANNING ELECTRICAL)
SHOP 51, BLDG 510 (SUBMARINE PLANNING ELECTRICAL)
SHOP 67, BLDG 510 (SURFACE PLANNING ELECTRONIC)
SHOP 67, BLDG 510 (SUBMARINE PLANNING ELECTRONIC)

PEARL HARBOR NAVAL SHIPYARD
CODE 190, 245, 272

PORTSMOUTH NAVAL SHIPYARD
CODE 190

PUGET SOUND NAVAL SHIPYARD
CODE 190, 272.57

NAVAL SURFACE WARFARE CENTER DIV DAHLGREN
CODE J54

NAVAL SURFACE WARFARE CENTER DIV CRANE
CODE C809

NAVAL SURFACE WARFARE CENTER DIV PORT HUENEME
CODE 4C11, 4B09, 4Y42

NAVAL SURFACE WARFARE CENTER CARDEROCK DIVISION DET ANNAPOLIS

NAVAL WEAPONS STATION, SEAL BEACH CA

NAVAL AMPHIBIOUS BASE CORONADO

NAVAL COMMAND CONTROL AND OCEAN SURVEILLANCE CENTER
CODE D825

NAVAL SUPPLY SYSTEMS COMMAND, MECHANICSBURG PA
CODE 051

JOINT SPECTRUM CENTER, ANNAPOLIS
ATTN NAVY DIRECTOR

NAVAL RESEARCH LABORATORY
CODE 5330.2F

SUPSHIP BATH
CODE 290

SUPSHIP GROTON
CODE 200, 242, 273, 273C, 601

SUPSHIP JACKSONVILLE
CODE 280

SUPSHIP NEWPORT NEWS
CODE 274, 274E

SUPSHIP NEW ORLEANS
CODE 290

SUPSHIP PASCAGOULA
CODE 270, 290

SUPSHIP PORTSMOUTH
CODE 190

SUPSHIP SAN DIEGO
CODE 270, 290

SUPSHIP SAN DIEGO, DET PEARL HARBOR
CODE 150, 200

SUPSHIP SAN FRANCISCO
CODE 240

PRIVATE SHIPYARDS

GENERAL DYNAMICS, EB DIV., GROTON, CT
Attn: R. Strum, Dept. 201
R. LaFlamme, Dept 422
S. Carlo, Dept. 429
R. Lightle, Dept. 429
R. Myrehm, Dept. 429
W. Orkney, Dept. 429
P. Embry, Dept 443
M. Cordeau, Dept. 448
M. LaPort, Dept. 448
J. Szarzynski, Dept. 448
T. Baker, Dept 449
J. Vitale, Dept. 449
H. Apicelli, Dept. 459
P. Holsinger, Dept. 459
A. Restile, Dept 459
L. Baker, Dept 470
R. Gaucher, Dept 470
E. Thaxton, Dept 470
B. Donch, Dept 491
W. Langley, Dept 633
C. E. Giles, Dept 633 (Division Library)

INGALLS SHIPBUILDING CORP., PASCAGOULA, MS
Material Planning
Production Systems
Purchasing Dept.
Technical Library

NEWPORT NEWS SHIPBUILDING AND DRYDOCK CO.
Attn: C. F. Clemens, Jr., Code E10
R. Crockford, Code E12
A. Palagri, Code E13
R. Swain, Code E13
S. Mancher, Code E67
Purchasing, Dept 051
Technical Library ,Bldg. 600
A. N. Strigle,Bldg. 600
R. Harrell, Design Division

UNIVERSITIES

California Institute of Technology, Pasadena, CA
Attn: Dr. R. D. Middlebrook
Georgia Institute of Technology, Atlanta, GA
Attn: Dr. Hugh Dennoy
Pennsylvania State University, State College, PA
Attn: J. Holland
University of Pennsylvania, Philadelphia, PA
Attn: Dr. R. Showers
Syracuse University, Syracuse, NY
Attn: Prof. J. Perini
University of Kentucky, Lexington, KY
Attn: Dr. C. Paul

CONTRACTORS

Analysis & Technology, Inc.
Panama City, FL
Attn: W. Tolbert

Anamet, Incorporated
Waterbury, CT
Attn: R. Picard

Anteon Corporation
Arlington, VA
Attn: M. Craig

Anteon Corporation
San Diego, CA
Attn: E. Quigley

Anteon Corporation
Virginia Beach, VA
Attn: R. Karcher

Anteon Corporation
King George, VA
Attn: B. Cotov

Bath Iron Works Corp.
Bath, ME
Attn: F. Munger

Charles Stark Droper Lab., Inc., Cambridge, MA
Attn: Technical Information Center, MS74

Dataproducts New England, Wallingford, CT

Darlington Inc., Wando SC
Attn: S. Faith
B. Hall

Diagnostic Retrieval Systems, Oakland, NJ

Eldyne Inc.
Norfolk, VA
Attn: M. Craft

ENTRACO, Healdsburg, CA
Attn: E. Goett

ESI, Peoria, IL
Attn: J. D. Colgan
G. S. Parks

F & K System, Fillmore, CA
Attn: F. Frederick

Fisher Associates, Bethesda, MD
Attn: J. Fisher

Fleet Support Center/Analysis & Technology, Inc.
Chesapeake, VA
Attn: S. Price

Fleet Support Center/Analysis & Technology, Inc.
North Stonington, CT
Attn: R. Macek
J. Convey
E. Dobbs

FMH Corporation, Costa Mesa, CA
Attn: C. W. Fullen
W. M. Cualin

G&H Technology, Camarillo, CA
Attn: J. N. Chavarria
C. Guerrero

GE, Camden, NJ
Attn: J. Sambalino

GE ESD., Moorestown, NJ
Attn: M. Plofker
S. Light
B. Druchman

General Physics Service Co., Groton, CT
Attn: D. Miles

Glenair, Inc., Glendale, CA
Attn: P. Oaks
R. Hays

GTE Government Systems, Mountain View, CA
Attn: D. Bonnett

Icore, International, Sunnyvale, CA

Ingalls Shipbuilding Division
Litton
Pascagoula, MS
Attn: D. Parker

ITT Corp, Gilifin Div., Van Nuns, CA
Attn: R. Baida

Kaman Tempo, Alexandria, VA
Attn: W. Tate

Lockheed Martin, Eagan, MN
Attn: S. Anderson

Louis Allis Co., New Berlin, Wisconsin
Attn: D. Swodzinski

Marinette Marine Corp., Marinette, WI
Attn: L. Stankewicz

Martin Marietta Corp., New London, CT
Attn: J. Ducas

Martin Marietta Corp., Syracuse, NY
Attn: B. Davis
G. Radway

McLaughlin Research Corp., Middletown, RI
Attn: M. Mascoli
A. Ferdinandsen
W. Ricci
S. Sherman
A. McHale
C. Hauquitz
H. Stone
S. Clark
R. Mazerelli

National Steel & Shipbuilding Co.
San Diego, CA
Attn: D. Langenhorst

Newport News Shipbuilding Co.
Newport News, VA
Attn: R. Bains

Norfolk Shipbuilding Co.
Norfolk, VA
Attn: R.G. Smith

Peterson Builders, Inc., Sturgeon Bay, WI
Attn: M. Lucas

R&B Enterprises
Arlington, VA
Attn: G. Johnson
P. Stoeberl

Raytheon Co., Sudbury, MA
Attn: T. Kelley

Resource Consultants, Inc., Chula Vista, CA
Attn: S. Yencer

SEACORP, New London, CT
Attn: M. Jones

Stanford Applied Engineering, Inc., Santa Clara, CA

Structured Technology, Corp., Niantic, CT
Attn: J. Seison

Tracor, Inc., Rockville, MD
Attn: D. Craig

Underwood Sales Corp., Wethersfield, CT
Attn: K. Trifiro

Unidyne, Niantic CT
Attn: J. Campbell

UNISYS, Charlottesville, VA
Attn: Dr. B. Willard

UNISYS, System Management, Great Neck, NY
Attn: M. Stall

VARO, Inc., Power Systems Division, Garland, TX
Attn: B. Allen

Veam, Division of Litton Systems, Inc., Watertown, CT
Attn: R. Matey

VITRO Corp., Groton, CT
Attn: V. Asciolla
E. Hancock
J. Zebrowski
K. Sargent
R. Warenda

Western Electric, Greensboro, NC
Attn: T. Skeen

William McCoy Co., Branford, CT

INTERNAL DISTRIBUTION LIST
FOR NUWC DIVISION NEWPORT, NEWPORT RI

F.C. ALLARD
CODE 3496
NEWPORT, RI 02841

C. P. AMIDON
CODE 3498
NEWPORT, RI 02841

T. A. ANDERSON
CODE 3431
NEWPORT, RI 02841

M.N. BARRAVECCHIA
CODE 5441
NEWPORT, RI 02841

T. G. BUCKO
CODE 71
NEWPORT, RI 02841

M. CARPENTER
CODE 3431
NEWPORT, RI 02841

R. N. CARPENTER
CODE 8221
NEWPORT, RI 02841

T. P. CONRAD
CODE 223
NEWPORT, RI 02841

L. CORMIER
CODE 2162
NEWPORT, RI 02841

D. CULBERTSON
CODE 3412
NEWPORT, RI 02841

P. DEAN
CODE 3413
NEWPORT, RI 02841

P.J. DEAN
CODE 31
NEWPORT, RI 02841

DR. D. F. DENCE
CODE 80
NEWPORT, RI 02841

C.F. DEREWIANY
CODE 3431
NEWPORT, RI 02841

S. DEVIN
CODE 3411
NEWPORT, RI 02841 3 COPIES

D. DIXON
CODE 343
NEWPORT, RI 02841

T. DOWNIE
CODE 3412
NEWPORT, RI 02841

P.L. DUFFY
CODE 83
NEWPORT, RI 02841

W.A. FERREIRA
CODE 2201
NEWPORT, RI 02841

T. FLOYD
CODE 3433
NEWPORT, RI 02841

T. F. FREEMAN
CODE 2093
NEWPORT, RI 02841

T. GOFF
CODE 2223
NEWPORT, RI 02841

M. W. GOUZIE
CODE 2121
NEWPORT, RI 02841

D.R. HANNA
CODE 544
NEWPORT, RI 02841 3 COPIES

B. HELME
CODE 2091
NEWPORT, RI 02841

E. JAVOR
CODE 3431
NEWPORT, RI 02841

J. KAMINSKI
CODE 2162
NEWPORT, RI 02841

W. KING
CODE 222
NEWPORT, RI 02841

L. LAZAR
CODE 3123
NEWPORT, RI 02841

M. H. LEE
CODE 54
NEWPORT, RI 02841

A.C. LIVSEY
CODE 8323
NEWPORT, RI 02841

R. MARTIN
CODE 21
NEWPORT, RI 02841

M. MARTINO
CODE 3122
NEWPORT, RI 02841

G. MAJEWSKI
CODE 3411
NEWPORT, RI 02841

S. MAYER
CODE 2133
NEWPORT, RI 02841

M.J. McDONALD
CODE 3413
NEWPORT, RI 02841

J. McGRATH
CODE 8241
NEWPORT, RI 02841

C. McMILLIAN
CODE 3493
NEWPORT, RI 02841

T. MOSES
CODE 2223
NEWPORT, RI 02841

G. NARDONE
CODE 2222
NEWPORT, RI 02841

C. NAWROCKI
CODE 319
NEWPORT, RI 02841

R. OLIVEIRA
CODE 2291
NEWPORT, RI 02841

J. PERRY
CODE 342
NEWPORT, RI 02841

S. SAFFORD
CODE 3413
NEWPORT, RI 02841

D.D. SEIDER
CODE 2212
NEWPORT, RI 02841

J.D. SHEPARD
CODE 70T
NEWPORT, RI 02841 3 COPIES

R. SIMON
CODE 215
NEWPORT, RI 02841 3 COPIES

M. SPAZIANTE
CODE 3131
NEWPORT, RI 02841

F. STAWARZ
CODE 3431
NEWPORT, RI 02841

J. THIBEAULT
CODE 3431
NEWPORT, RI 02841

R.L. THIBEAULT
CODE 3431
NEWPORT, RI 02841

R. WHITE
CODE 3431
NEWPORT, RI 02841

INTERNAL NAVSEA DISTRIBUTION LIST
FOR
NAVSEA HANDBOOK S9407-AB-HBK-010, Revision 2 (CHANGE 1)
NAVSEA, WASHINGTON, DC

NAVSEA	(SEA 03D3, SEA 03Z44, SEA 05H3, SEA 05H31, SEA 05K, SEA 05K1, SEA 05K3, SEA 05K4, SEA 08K/CHABAY)
PEO MIW	(PMS303A41, PMS407-21)
PEO SUB	(PMS350AB, PMS401B, PMS425-2, PMS450TIELEC, PMS450T2)
PEO TAD	(TAD-D31A, PMS 401-1)
PEO TSC	(PMS400B1, PMS400B3X, PMS400B6, PMS400D1, PMS400D4, PMS400D5, PMS500TM)
PEO USW	(PMS411C)
SEA 91	(PMS307/A. BEVERIDGE)
SEA 92	(SEA 92C1, SEA 92C2, SEA 92C4, SEA 92T2, PMS 392A42, PMS395B)