507-117

Backshell, EMI, AS81659, M25 Thread

507-117

EMI backshell with M25 thread fits AS81659 connectors

Backshell has M25 thread and interface teeth compatible with Adapter Code H (D38999 Series III/IV) size 17 fittings.

Aluminum with stainless steel hardware.

PART NUMBER
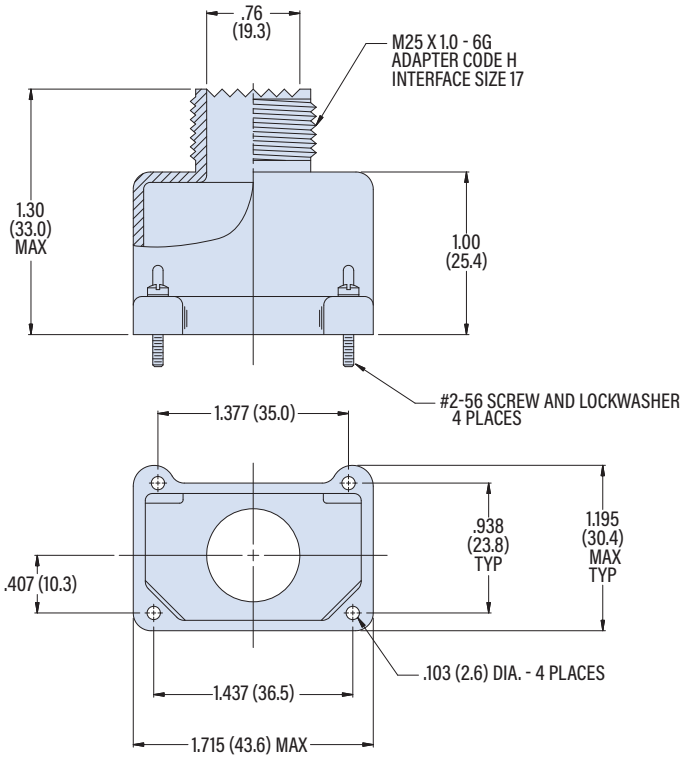
Sample PN➔	507-117	NF
Base P/N	507-117	
Finish	M	Electroless Nickel
	JF	Cadmium with Yellow Chromate
	TZ	Tin-Zinc
	NF	Olive Drab Cadmium