AS85049/91 and AS85049/92
Composite Strain Reliefs
Self-Locking

Glenair®

CONNECTOR DESIGNATOR:	
H	MIL-DTL-38999 Series III & IV, EN3645

Material and Finish Designator

J = Composite (Conductive), Cadmium Olive Drab over Electroless Nickel
M = Composite (Conductive) Electroless Nickel
T = Composite (Non-Conductive) without Plating
XC = Composite (Conductive) Nickel Fluorocarbon Polymer
YC = Composite (Conductive) Pure Dense Electrodeposited Aluminum
ZC = Composite (Conductive) Zinc-Nickel, Black

Basic Part Number
M85049/91 = Straight
M85049/92 = 90°

M85049/92 N 11 T

– = Detented
N = Non-Detented

Shell Size

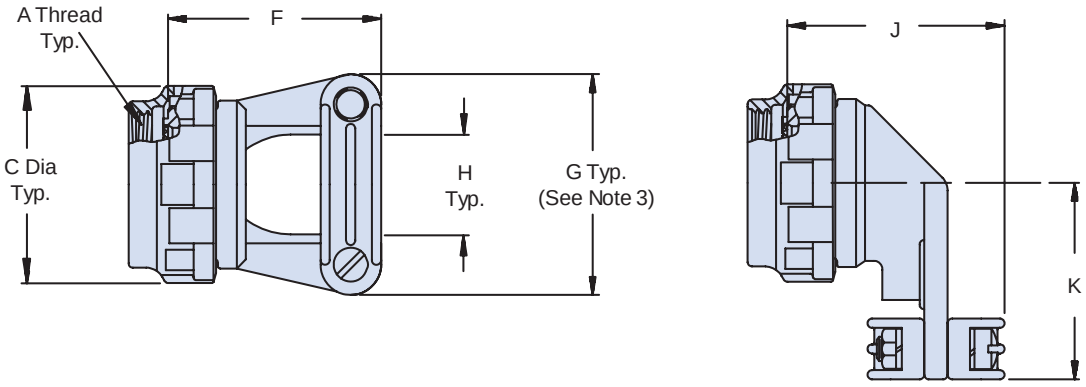

TABLE I: Shell Size, Cable Entry and Backshell Dimensions

Shell Size	A Thread Class 2B	Ø C Max		F Max		G Max		Ø H +.031		J Max		K ±.062	K (1.6)
09	M12 X 1 - 6H	.858	(21.8)	.840	(21.3)	.98	(24.9)	.219	(5.6)	1.06	(26.9)	.875	(22.2)
11	M15 X 1 - 6H	.984	(25.0)	.960	(24.4)	1.05	(26.7)	.264	(6.7)	1.10	(27.9)	.937	(23.8)
13	M18 X 1 - 6H	1.157	(29.4)	1.100	(27.9)	1.20	(30.5)	.344	(8.7)	1.18	(30.0)	1.031	(26.2)
15	M22 X 1 - 6H	1.280	(32.5)	1.100	(27.9)	1.30	(33.0)	.460	(11.7)	1.30	(33.0)	1.125	(28.6)
17	M25 X 1 - 6H	1.406	(35.7)	1.230	(31.2)	1.42	(36.1)	.545	(13.8)	1.38	(35.1)	1.312	(33.3)
19	M28 X 1 - 6H	1.516	(38.5)	1.410	(35.8)	1.52	(38.6)	.615	(15.6)	1.45	(36.8)	1.375	(34.9)
21	M31 X 1 - 6H	1.642	(41.7)	1.510	(38.4)	1.64	(41.7)	.698	(17.7)	1.54	(39.1)	1.500	(38.1)
23	M34 X 1 - 6H	1.768	(44.9)	1.660	(42.2)	1.77	(45.0)	.700	(17.8)	1.62	(41.1)	1.625	(41.3)
25	M37 X 1 - 6H	1.890	(48.0)	1.760	(44.7)	1.89	(48.0)	.850	(21.6)	1.69	(42.9)	1.750	(44.5)

APPLICATION NOTES

1. Assembly to be identified with manufacturer's name and part number, space permitting.
2. Cable Entry is measured with saddle bars closed and bottomed on clamp ears.
3. For complete dimensions, see the applicable Military Specification.
4. Metric dimensions (mm) are in parentheses.

Dimensions in inches (millimeters) and are subject to change without notice.

© 2013 Glenair, Inc.
U.S. CAGE Code 06324
Printed in U.S.A.