234-203 Wall Mount Plug

QPL Part Number Development

Sample Part Number	234-203	-00	NF	11	-35	P	N

MIL-DTL-38999	**234-203** = Wall-Mount Plug
Connector Style	**00** = Plug, Wall Mount with Slotted Holes **CM** = Plug, Wall Mount with Metric Clinch Nuts **CS** = Plug, Wall Mount with Standard Clinch Nuts **DO** = Plug, Wall Mount with Thru Holes **HM** = Plug, Wall Mount with Metric Helicoils **HS** = Plug, Wall Mount with Standard Helicoils
Material/Finish	See Material/Finish Table
Shell Size	**11**, **13**, **15**, **17**, **19**, **21**, **23**, **25**
Insert Arrangement	Per MIL-STD-1560; See reference information section for details
Contact Style	**P** = Pin Contacts **S** = Socket Contacts
Polarization	**N** (Normal), **A**, **B**, **C**, **D**, **K**, **L**, **M**, **R**; see polarization positions table **U** = Universal

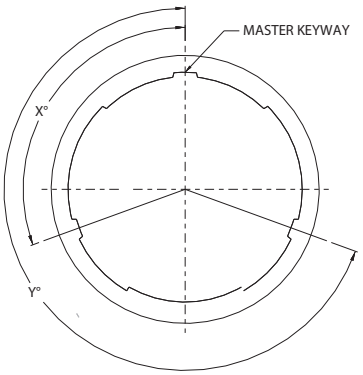

Polarization Position

	X	Y
N	110°	250°
A	100°	260°
B	90°	270°
C	80°	280°
D	70°	290°
K	120°	255°
L	120°	265°
M	120°	275°
R	120°	285°

Material/Finish

2570-2666 Class	D38999 Class	Material	Finish
NF	W	Aluminum Alloy	CAD/O.D. Over Electroless Nickel (500 Hour Salt Spray)
ME	F		Electroless Nickel (48 Hour Salt Spray)
MA	G		Electroless Nickel, Matte Finish, Space Grade (48 Hour Salt Spray)
MT	T		Nickel, PTFE
ZR	Z*		Zinc Nickel-Black
MN	AA*		Tri-Nickel Alloy (Mega-Nickel, 1000 Hour Salt Spray)
TZ	V*		Tin-Zinc
XM	M	Composite	Electroless Nickel
XW	J		CAD/O.D. Over Electrtoless Nickel
Z1	K*	SST	Passivate
ZL	S*		Nickel Plate Per QQ-N-290

Recommended Mounting Holes

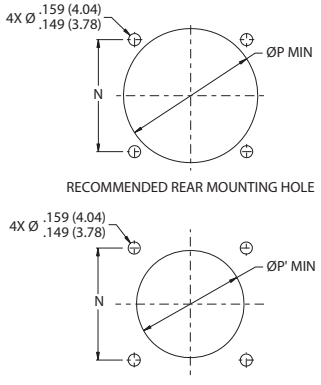

Shell Size	ø P Min	ø P' Min	N Bsc
-11	1.052 (26.7)	0.700 (17.8)	0.982 (25.0)
-13	1.225 (31.1)	0.818 (20.8)	1.075 (27.3)
-15	1.351 (34.3)	0.976 (24.8)	1.161 (29.5)
-17	1.477 (37.5)	1.094 (27.8)	1.267 (32.2)
-19	1.588 (40.4)	1.212 (30.8)	1.358 (34.5)
-21	1.710 (43.5)	1.330 (33.8)	1.460 (37.1)
-23	1.836 (46.7)	1.448 (36.8)	1.566 (39.8)
-25	1.962 (49.9)	1.566 (39.8)	1.672 (42.5)

© 2026 Glenair, Inc • 1211 Air Way, Glendale, CA 91201 • 818-247-6000 • www.glenair.com • U.S. CAGE code 06324 •
MIL-DTL-38999 Series III and IV · Dimensions in Inches (millimeters) are subject to change without notice.

234-203 Wall Mount Plug

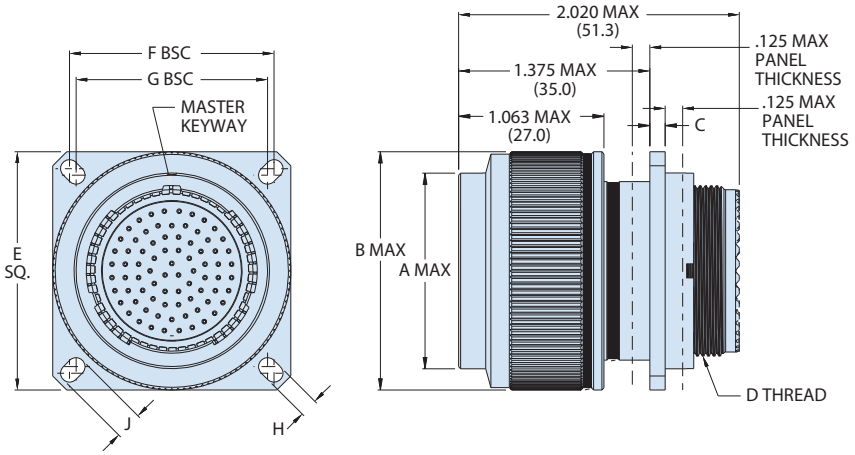

00 - PLUG, WALL MOUNT WITH SLOTTED HOLES

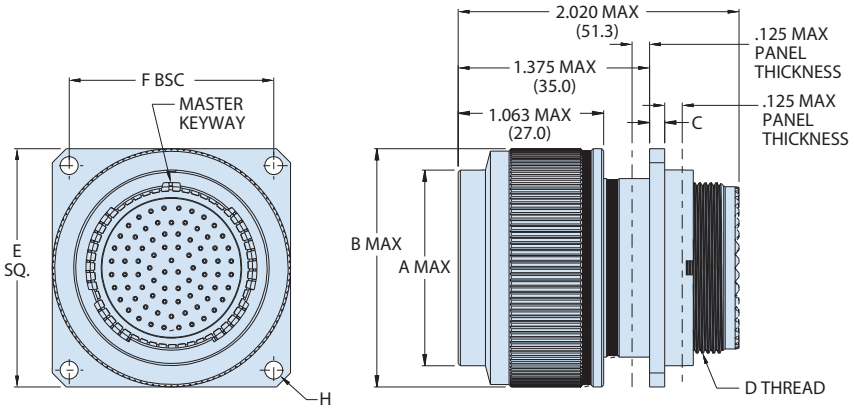

DO - PLUG, WALL MOUNT WITH THRU HOLES

-00, -D0 Dimensions										
Shell Size	Shell Code	Ø A Max	Ø B Max	C	D Thread	E Sq.	F Bsc	G Bsc	H	J
-11	B	.776 (19.7)	1.047 (26.6)	.102 (2.6) .083 (2.1)	M15X1.0-6g 0.100R	1.222 (31.1) 1.182 (30.0)	0.982 (25.0)	0.858 (21.8)	.136 (3.5) .120 (3.0)	.224 (5.69) .208 (5.28)
-13	C	.902 (22.9)	1.220 (31.0)		M18X1.0-6g 0.100R	1.315 (33.5) 1.275 (32.3)	1.075 (27.3)	0.982 (25.0)		.202 (5.1) .186 (4.7)
-15	D	1.039 (26.4)	1.346 (34.2)		M22X1.0-6g 0.100R	1.401 (35.6) 1.361 (34.5)	1.161 (29.5)	1.068 (27.1)		
-17	E	1.150 (29.2)	1.472 (37.4)		M25X1.0-6g 0.100R	1.507 (38.3) 1.467 (37.2)	1.267 (32.2)	1.174 (29.8)		
-19	F	1.276 (32.4)	1.583 (40.2)		M28X1.0-6g 0.100R	1.598 (40.6) 1.558 (39.5)	1.358 (34.5)	1.265 (32.1)		
-21	G	1.402 (35.6)	1.705 (43.3)	.134 (3.4) .114 (2.9)	M31X1.0-6g 0.100R	1.720 (43.7) 1.680 (42.6)	1.460 (37.1)	1.367 (34.7)		
-23	H	1.528 (38.8)	1.831 (46.5)		M34X1.0-6g 0.100R	1.846 (46.9) 1.806 (45.8)	1.566 (39.8)	1.442 (36.6)	.162 (4.1) .146 (3.7)	.250 (6.4) .234 (5.9)
-25	J	1.650 (41.9)	1.957 (49.7)		M37X1.0-6g 0.100R	1.972 (50.1) 1.932 (49.0)	1.672 (42.5)	1.548 (39.3)		

© 2026 Glenair, Inc • 1211 Air Way, Glendale, CA 91201 • 818-247-6000 • www.glenair.com • U.S. CAGE code 06324 •
MIL-DTL-38999 Series III and IV · Dimensions in Inches (millimeters) are subject to change without notice.

234-203 Wall Mount Plug

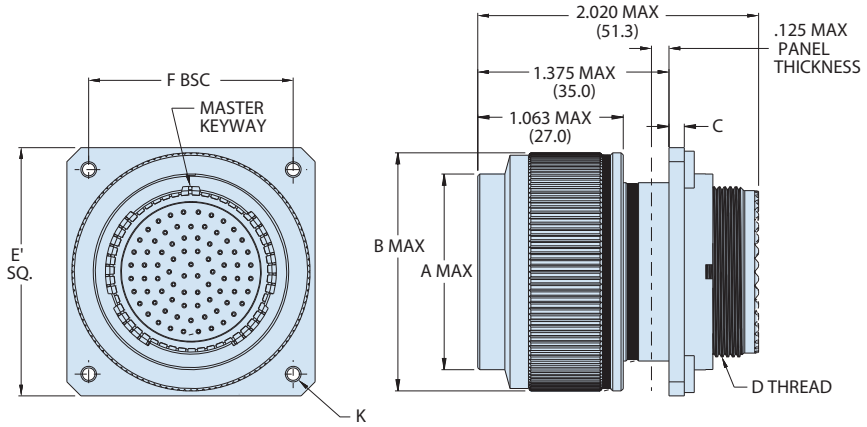

CS - PLUG, WALL MOUNT WITH STANDARD CLINCH NUTS

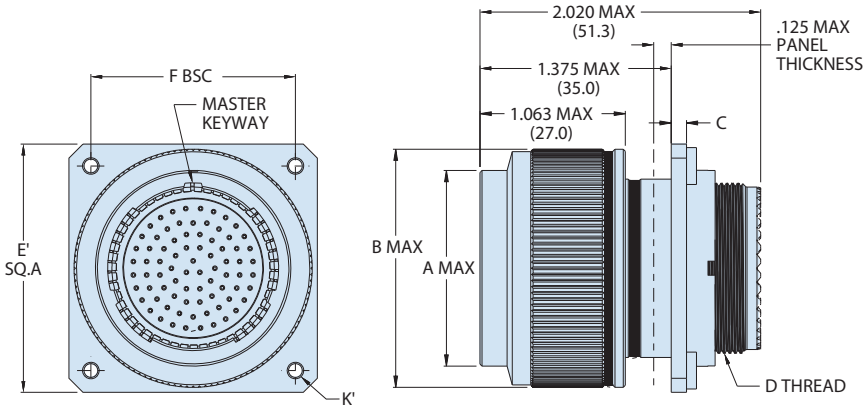

CM - PLUG, WALL MOUNT WITH METRIC CLINCH NUTS

-CS, -CM Dimensions									
Shell Size	Shell Code	Ø A Max	Ø B Max	C	D Thread	E' Sq.	F Bsc	K Thread	K' Thread
-11	B	.776 (19.7)	1.047 (26.6)	.102 (2.6) .083 (2.1)	M15X1.0-6g 0.100R	1.294 (32.9) 1.254 (31.8)	0.982 (25.0)	#4-40 UNC	M3X0.5
-13	C	.902 (22.9)	1.220 (31.0)		M18X1.0-6g 0.100R	1.387 (53.3) 1.347 (34.2)	1.075 (27.3)		
-15	D	1.039 (26.4)	1.346 (34.2)		M22X1.0-6g 0.100R	1.473 (37.5) 1.433 (36.3)	1.161 (29.5)		
-17	E	1.150 (29.2)	1.472 (37.4)		M25X1.0-6g 0.100R	1.579 (40.2) 1.539 (39.0)	1.267 (32.2)		
-19	F	1.276 (32.4)	1.583 (40.2)		M28X1.0-6g 0.100R	1.670 (42.5) 1.630 (41.4)	1.358 (34.5)		
-21	G	1.402 (35.6)	1.705 (43.3)	.134 (3.4) .114 (2.9)	M31X1.0-6g 0.100R	1.792 (45.6) 1.752 (44.5)	1.460 (37.1)		
-23	H	1.528 (38.8)	1.831 (46.5)		M34X1.0-6g 0.100R	1.918 (48.8) 1.878 (47.7)	1.566 (39.8)	#6-32 UNC	M4X0.7
-25	J	1.650 (41.9)	1.957 (49.7)		M37X1.0-6g 0.100R	2.044 (52.0) 2.004 (50.9)	1.672 (42.5)		

© 2026 Glenair, Inc • 1211 Air Way, Glendale, CA 91201 • 818-247-6000 • www.glenair.com • U.S. CAGE code 06324 •
MIL-DTL-38999 Series III and IV · Dimensions in Inches (millimeters) are subject to change without notice.

234-203 Wall Mount Plug

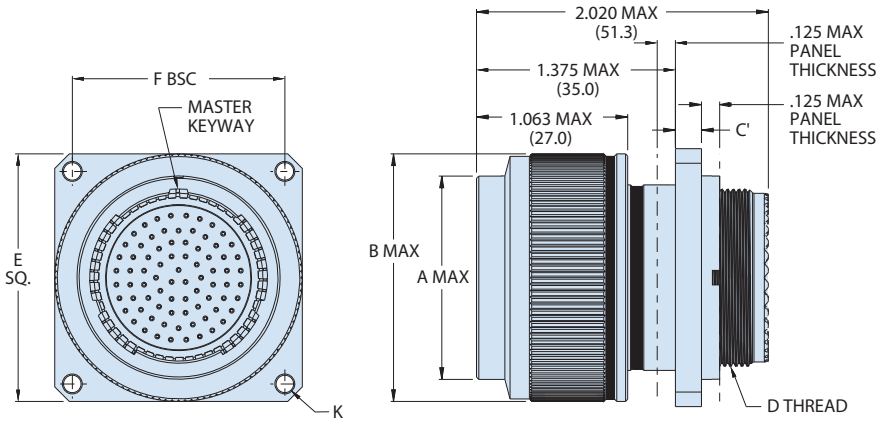

HS - PLUG, WALL MOUNT WITH STANDARD HELICOILS

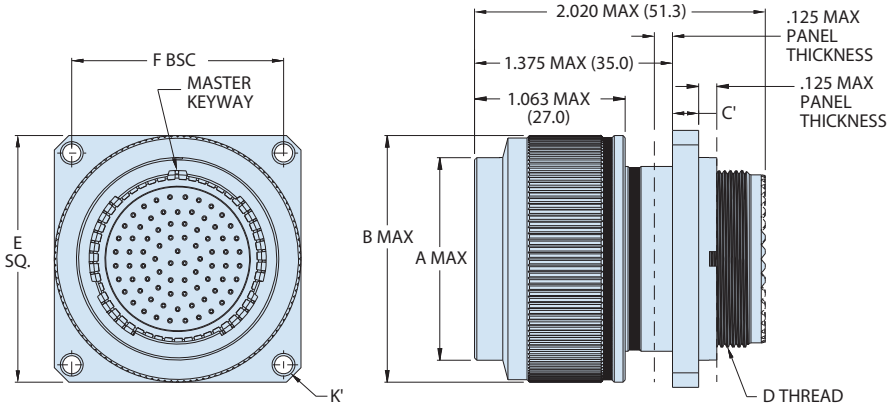

HM - PLUG, WALL MOUNT WITH METRIC HELICOILS

-HS, -HM Dimensions									
Shell Size	Shell Code	Ø A Max	Ø B Max	C′	D Thread	E Sq.	F Bsc	K Thread	K′ Thread
-11	B	.776 (19.7)	1.047 (26.6)	.179 (4.5) .140 (3.6)	M15X1.0-6g 0.100R	1.222 (31.1) 1.182 (30.0)	0.982 (25.0)	#4-40 UNC	M3X0.5
-13	C	.902 (22.9)	1.220 (31.0)		M18X1.0-6g 0.100R	1.315 (33.5) 1.275 (32.3)	1.075 (27.3)		
-15	D	1.039 (26.4)	1.346 (34.2)		M22X1.0-6g 0.100R	1.401 (35.6) 1.361 (34.5)	1.161 (29.5)		
-17	E	1.150 (29.2)	1.472 (37.4)		M25X1.0-6g 0.100R	1.507 (38.3) 1.467 (37.2)	1.267 (32.2)		
-19	F	1.276 (32.4)	1.583 (40.2)		M28X1.0-6g 0.100R	1.598 (40.6) 1.558 (39.5)	1.358 (34.5)		
-21	G	1.402 (35.6)	1.705 (43.3)		M31X1.0-6g 0.100R	1.720 (43.7) 1.680 (42.6)	1.460 (37.1)		
-23	H	1.528 (38.8)	1.831 (46.5)	.190 (4.8) .170 (4.3)	M34X1.0-6g 0.100R	1.846 (46.9) 1.806 (45.8)	1.566 (39.8)	#6-32 UNC	M4X0.7
-25	J	1.650 (41.9)	1.957 (49.7)		M37X1.0-6g 0.100R	1.972 (50.1) 1.932 (49.0)	1.672 (42.5)		

© 2026 Glenair, Inc • 1211 Air Way, Glendale, CA 91201 • 818-247-6000 • www.glenair.com • U.S. CAGE code 06324 •
MIL-DTL-38999 Series III and IV · Dimensions in Inches (millimeters) are subject to change without notice.