MIL-DTL-38999 Series III, Triple-Start Thread

233-203 wall mount plug with rear release crimp contacts and rear accessory options

COTS Part Number Development

Sample Part Number	233-203	-00	NF	13-8	P	N

Series / Basic Part No.	**233-203** = Environmental, wall mount plug
Connector Style	**00** = Plug, wall mount with slotted holes **07** = Plug, jam nut **CM** = Plug, wall mount with metric clinch nuts **CS** = Plug, wall mount with standard clinch nuts **D0** = Plug, wall mount with thru holes **HM** = Plug, wall mount with metric helicoils **HS** = Plug, wall mount with standard helicoils
Material and Finish	**NF** = Aluminum alloy, Cad/O.D. Over electroless nickel **MA** = Aluminum alloy, Electroless nickel, matte **ME** = Aluminum alloy, Electroless nickel **MN** = Aluminum alloy, Mega-nickel **MT** = Aluminum alloy, Nickel-PTFE **TZ** = Aluminum alloy, Tin-zinc **ZN** = Aluminum alloy, Zinc-nickel, olive drab **ZR** = Aluminum alloy, Zinc NI, black (tri-valent CR) **TD** = Titanium, Natural - no plate **Z1** = Stainless steel, Passivate **ZL** = Stainless steel, Electrodeposited nickel **AB** = Marine bronze, None (clean only)
Shell Size-Insert Arrangement	Per MIL-STD-1560; See reference information section for details
Contact Type	**P** = Pin contact **S** = Socket contact
Alternate Polarization	**A, B, C, D, E, N** (Normal)

* Connectors must be ordered with "MA" finish and modification code "-186T" to conform to the thermal vacuum outgassing requirements of Class G. Additional material/finish options are available, consult factory for ordering information.

NOTES

1. Insert arrangements per MIL-STD-1560,
2. Assembly is identified with glenair's name, cage code, part number, and date code, space permitting
3. Glenair's 233-203 connectors are designed to meet or exceed the mechanical, dimensional, electrical, and environmental requirements of MIL-DTL-38999, D38999/26, and MIL-STD-1560 except as shown and/or noted. Glenair connectors mate with any QPL manufacturer's MIL-DTL-38999, Series III connectors having the same shell size, insert arrangement, polarization, and mating contact.
4. Insert arrangement shown is for reference only. Pin interface shown.
5. Blue color band indicates rear release retention system.
6. Consult factory for crimp tools and accessory selection.
7. Extended shell will result in a recessed grommet. Area may be prone to collect F.O.D and/or humidity.

MATERIAL / FINISH:

1. Barrel, coupling nut - see Table I
2. Grounding spring - becu alloy / nickel plated
3. Insulator - high grade rigid dielectric / N.A.
4. Seals, grommet, o-ring - fluorosilicone blend / N.A
5. Contacts - copper alloy

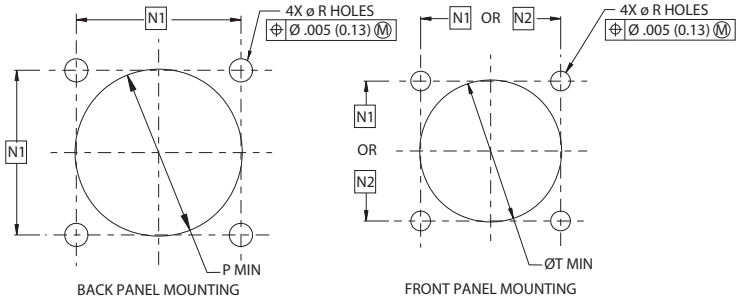

Recommended Mounting Hole Table

Shell Size	Ø P Min	N1 Bsc	Ø T Min	N2 Bsc	ØR
09	.889 (22.58)	.972 (24.69)	.516 (13.11)	.850 (21.59)	.133 (3.38) .123 (3.12)
11	.999 (25.37)	1.029 (26.14)	.625 (15.88)	.938 (23.83)	
13	1.171 (29.74)	1.149 (29.18)	.750 (19.05)	1.058 (26.87)	
15	1.296 (32.92)	1.238 (31.45)	.906 (23.01)	1.147 (29.13)	
17	1.421 (36.09)	1.327 (33.71)	1.016 (25.81)	1.236 (31.39)	
19	1.530 (38.86)	1.405 (35.69)	1.141 (28.98)	1.313 (33.35)	
21	1.655 (42.04)	1.494 (37.95)	1.266 (32.16)	1.403 (35.64)	
23	1.780 (45.21)	1.633 (41.48)	1.375 (34.93)	1.510 (38.35)	.159 (4.04) .149 (3.78)
25	1.905 (48.39)	1.719 (43.66)	1.484 (37.69)	1.596 (40.54)	.155 (3.94) .145 (3.68)

© 2026 Glenair, Inc • 1211 Air Way, Glendale, CA 91201 • 818-247-6000 • www.glenair.com • U.S. CAGE code 06324 •
MIL-DTL-38999 Series III and IV · Dimensions in Inches (millimeters) are subject to change without notice.

Rev. 11.04.26

MIL-DTL-38999 Series III, Triple-Start Thread

233-203 wall mount plug with rear release crimp contacts and rear accessory options

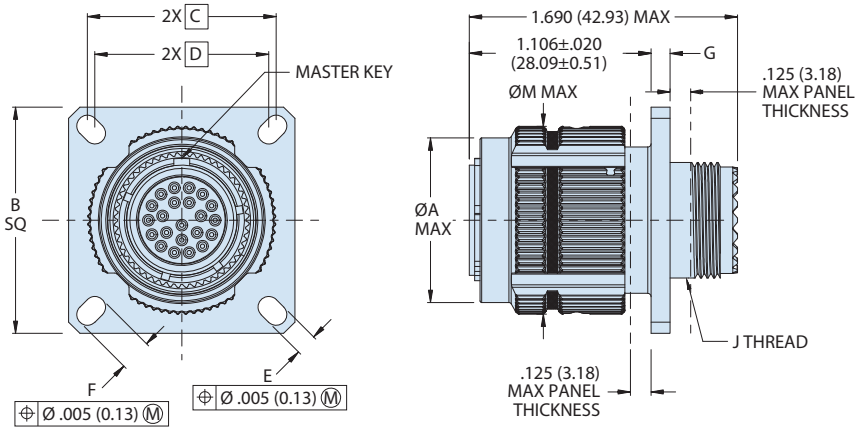

00 - WALL MOUNT PLUG WITH SLOTTED HOLES

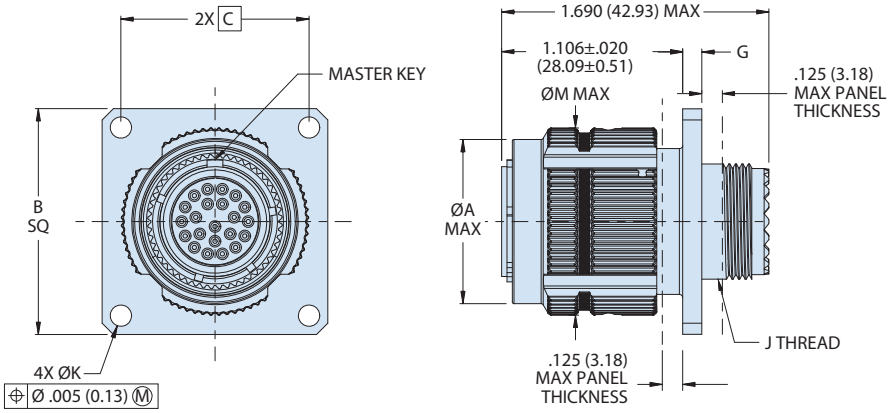

D0 - WALL MOUNT PLUG WITH THRU HOLES

-00, -D0 Dimensions										
Shell Size	Ø A Max	B Sq	C Bsc	D Bsc	E	F	G	J Thread	K Max	M Max
9	.811 (20.60)	1.213 (30.81) 1.189 (30.20)	.972 (24.69)	.850 (21.59)	.136 (3.45) .120 (3.05)	.224 (5.69) .208 (5.28)	.122 (3.10) .083 (2.11)	M12 X 1.0-6g 0.100R	.136 (3.45) .120 (3.05)	.860 (21.84)
11	.929 (23.60)	1.271 (32.28) 1.247 (31.67)	1.029 (26.14)	.938 (23.83)		.202 (5.13) .186 (4.72)		M15 X 1.0-6g 0.100R		.985 (25.02)
13	1.110 (28.19)	1.391 (35.33) 1.367 (34.72)	1.149 (29.18)	1.058 (26.87)				M18 X 1.0-6g 0.100R		1.155 (29.34)
15	1.232 (31.29)	1.509 (38.33) 1.485 (37.72)	1.238 (31.45)	1.147 (29.13)				M22 X 1.0-6g 0.100R		1.280 (32.51)
17	1.358 (34.49)	1.598 (40.59) 1.574 (39.98)	1.327 (33.71)	1.236 (31.39)				M25 X 1.0-6g 0.100R		1.406 (35.71)
19	1.469 (37.31)	1.676 (42.57) 1.652 (41.96)	1.405 (35.69)	1.313 (33.35)			.153 (3.89) .114 (2.90)	M28 X 1.0-6g 0.100R		1.516 (38.51)
21	1.594 (40.49)	1.765 (44.83) 1.741 (44.22)	1.494 (37.95)	1.403 (35.64)				M31 X 1.0-6g 0.100R		1.642 (41.71)
23	1.720 (43.69)	1.970 (50.04) 1.946 (49.43)	1.633 (41.48)	1.510 (38.35)	.162 (4.11) .146 (3.71)	.250 (6.35) .234 (5.94)		M34 X 1.0-6g 0.100R	.162 (4.11) .146 (3.71)	1.768 (44.91)
25	1.843 (46.81)	2.056 (52.22) 2.032 (51.61)	1.719 (43.66)	1.596 (40.54)				M37 X 1.0-6g 0.100R		1.890 (48.01)

© 2026 Glenair, Inc • 1211 Air Way, Glendale, CA 91201 • 818-247-6000 • www.glenair.com • U.S. CAGE code 06324 •
MIL-DTL-38999 Series III and IV · Dimensions in Inches (millimeters) are subject to change without notice.

233-203 wall mount plug with rear release crimp contacts and rear accessory options

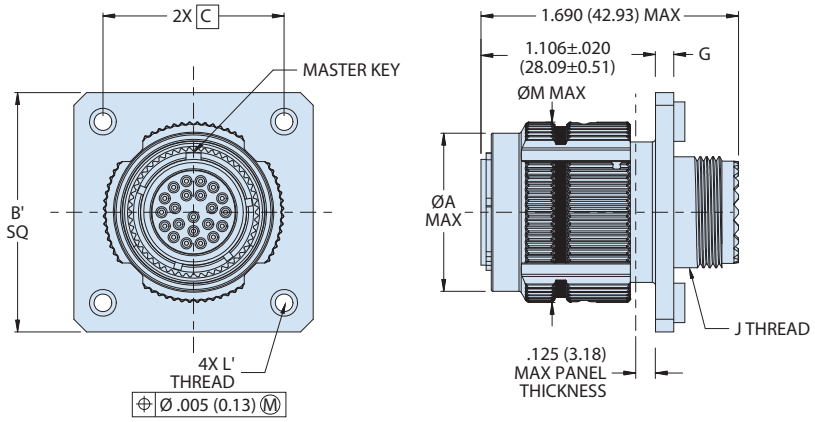

CM - WALL MOUNT PLUG WITH METRIC CLINCH NUTS

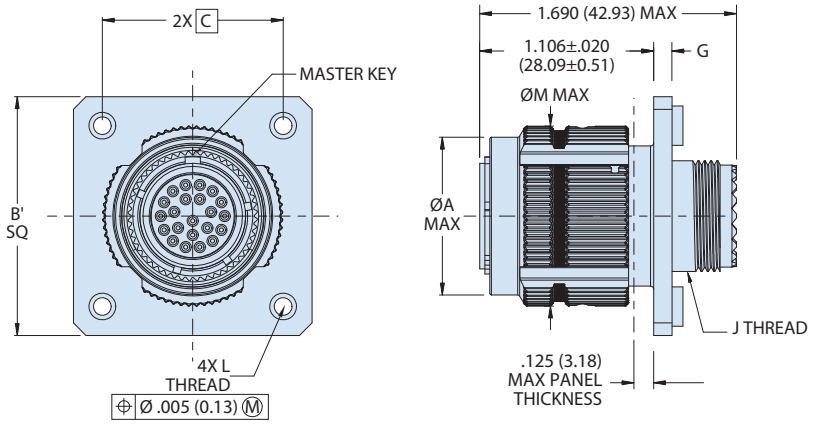

CS - WALL MOUNT PLUG WITH STANDARD CLINCH NUTS

-CM, -CS Dimensions								
Shell Size	Ø A Max	B′ SQ	C Bsc	G	J Thread	L Thread	L′ Thread	M Max
9	.811 (20.60)	1.352 (34.34) 1.328 (33.73)	.972 (24.69)	.122 (3.10) .083 (2.11)	M12 X 1.0-6g 0.100R	.112-40 UNC	M3X0.5	.860 (21.84)
11	.929 (23.60)	1.409 (35.79) 1.385 (35.18)	1.029 (26.14)		M15 X 1.0-6g 0.100R			.985 (25.02)
13	1.110 (28.19)	1.529 (38.84) 1.505 (38.23)	1.149 (29.18)		M18 X 1.0-6g 0.100R			1.155 (29.34)
15	1.232 (31.29)	1.618 (41.10) 1.594 (40.49)	1.238 (31.45)		M22 X 1.0-6g 0.100R			1.280 (32.51)
17	1.358 (34.49)	1.707 (43.36) 1.683 (42.75)	1.327 (33.71)		M25 X 1.0-6g 0.100R			1.406 (35.71)
19	1.469 (37.31)	1.761 (44.73) 1.737 (44.12)	1.405 (35.69)	.153 (3.89) .114 (2.90)	M28 X 1.0-6g 0.100R			1.516 (38.51)
21	1.594 (40.49)	1.874 (47.60) 1.850 (46.99)	1.494 (37.95)		M31 X 1.0-6g 0.100R			1.642 (41.71)
23	1.720 (43.69)	2.007 (50.98) 1.983 (50.37)	1.633 (41.48)		M34 X 1.0-6g 0.100R	.138-32 UNC	M4X0.7	1.768 (44.91)
25	1.843 (46.81)	2.093 (53.16) 2.069 (52.55)	1.719 (43.66)		M37 X 1.0-6g 0.100R			1.890 (48.01)

© 2026 Glenair, Inc • 1211 Air Way, Glendale, CA 91201 • 818-247-6000 • www.glenair.com • U.S. CAGE code 06324 •
MIL-DTL-38999 Series III and IV · Dimensions in Inches (millimeters) are subject to change without notice.
Rev. 11.04.26

MIL-DTL-38999 Series III, Triple-Start Thread

233-203 wall mount plug with rear release crimp contacts and rear accessory options

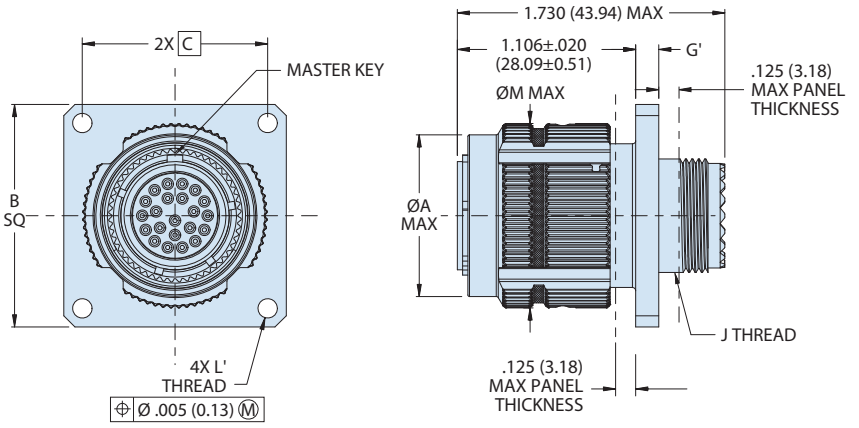

HM - WALL MOUNT PLUG WITH METRIC HELICOILS

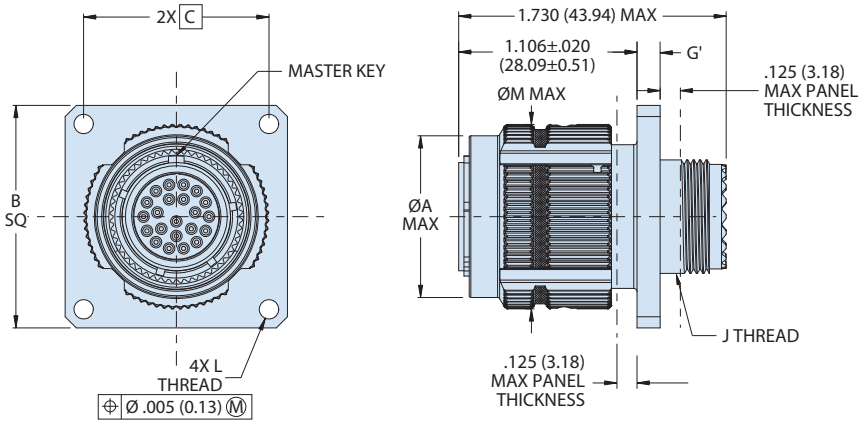

HS - WALL MOUNT PLUG WITH STANDARD HELICOIL

-HM, -HS Dimensions								
Shell Size	Ø A Max	B Sq	C Bsc	G'	J Thread	L Thread	L' Thread	M Max
9	.811 (20.60)	1.213 (30.81) 1.189 (30.20)	.972 (24.69)	.179 (4.55) .140 (3.56)	M12 X 1.0-6g 0.100R	.112-40 UNC	M3X0.5	.860 (21.84)
11	.929 (23.60)	1.271 (32.28) 1.247 (31.67)	1.029 (26.14)		M15 X 1.0-6g 0.100R			.985 (25.02)
13	1.110 (28.19)	1.391 (35.33) 1.367 (34.72)	1.149 (29.18)		M18 X 1.0-6g 0.100R			1.155 (29.34)
15	1.232 (31.29)	1.509 (38.33) 1.485 (37.72)	1.238 (31.45)		M22 X 1.0-6g 0.100R			1.280 (32.51)
17	1.358 (34.49)	1.598 (40.59) 1.574 (39.98)	1.327 (33.71)		M25 X 1.0-6g 0.100R			1.406 (35.71)
19	1.469 (37.31)	1.676 (42.57) 1.652 (41.96)	1.405 (35.69)		M28 X 1.0-6g 0.100R			1.516 (38.51)
21	1.594 (40.49)	1.765 (44.83) 1.741 (44.22)	1.494 (37.95)	.190 (4.83) .170 (4.32)	M31 X 1.0-6g 0.100R			1.642 (41.71)
23	1.720 (43.69)	1.970 (50.04) 1.946 (49.43)	1.633 (41.48)		M34 X 1.0-6g 0.100R	.138-32 UNC	M4X0.7	1.768 (44.91)
25	1.843 (46.81)	2.056 (52.22) 2.032 (51.61)	1.719 (43.66)		M37 X 1.0-6g 0.100R			1.890 (48.01)

© 2026 Glenair, Inc • 1211 Air Way, Glendale, CA 91201 • 818-247-6000 • www.glenair.com • U.S. CAGE code 06324 •
MIL-DTL-38999 Series III and IV · Dimensions in Inches (millimeters) are subject to change without notice.

MIL-DTL-38999 Series III, Triple-Start Thread

233-203 wall mount plug with rear release crimp contacts and rear accessory options

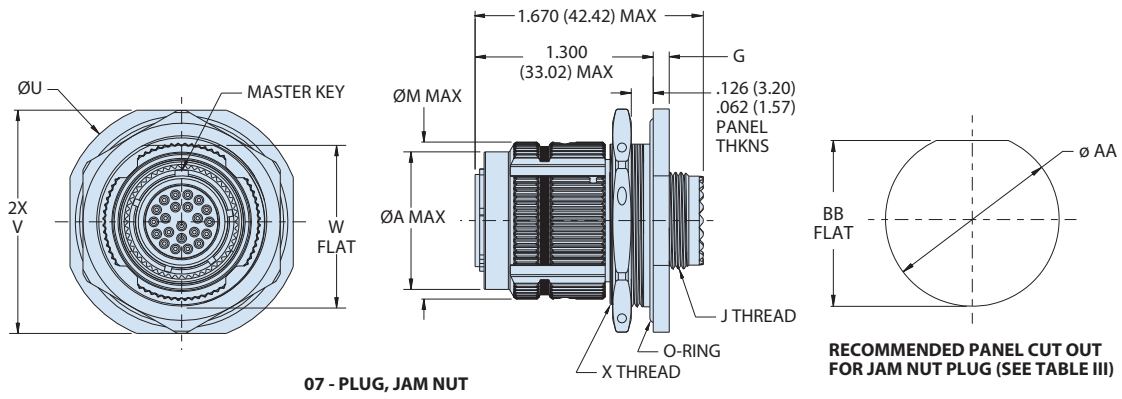

07 - PLUG, JAM NUT

RECOMMENDED PANEL CUT OUT FOR JAM NUT PLUG (SEE TABLE III)

-07 Dimensions										
Shell Size	ø A Max	G	J Thread	M Max	ø U	ø V	W Flat	X Thread	ø AA	BB Flat
9	.811 (20.60)	.122 (3.10) .083 (2.11)	M12 X 1.0-6g 0.100R	.860 (21.84)	1.512 (38.40) 1.488 (37.80)	1.390 (35.31) 1.358 (34.49)	.942 (23.93) .932 (23.67)	M25 X 1.0-6g 0.100R	1.020 (25.91) 1.010 (25.65)	.955 (24.26) .945 (24.00)
11	.929 (23.60)		M15 X 1.0-6g 0.100R	.985 (25.02)	1.638 (41.61) 1.614 (41.00)	1.516 (38.51) 1.484 (37.69)	1.066 (27.08) 1.056 (26.82)	M28 X 1.0-6g 0.100R	1.145 (29.08) 1.135 (28.83)	1.085 (27.56) 1.075 (27.31)
13	1.110 (28.19)		M18 X 1.0-6g 0.100R	1.155 (29.34)	1.764 (44.81) 1.740 (44.20)	1.642 (41.71) 1.610 (40.89)	1.191 (30.25) 1.181 (30.00)	M32 X 1.0-6g 0.100R	1.280 (32.51) 1.270 (32.26)	1.220 (30.99) 1.210 (30.73)
15	1.232 (31.29)		M22 X 1.0-6g 0.100R	1.280 (32.51)	1.949 (49.50) 1.925 (48.90)	1.827 (46.41) 1.795 (45.59)	1.316 (33.43) 1.306 (33.17)	M35 X 1.0-6g 0.100R	1.405 (35.69) 1.395 (35.43)	1.345 (34.16) 1.335 (33.91)
17	1.358 (34.49)		M25 X 1.0-6g 0.100R	1.406 (35.71)	2.075 (52.71) 2.051 (52.10)	1.953 (49.61) 1.921 (48.79)	1.441 (36.60) 1.431 (36.35)	M38 X 1.0-6g 0.100R	1.525 (38.74) 1.515 (38.48)	1.465 (37.21) 1.455 (36.96)
19	1.469 (37.31)	.153 (3.89) .114 (2.90)	M28 X 1.0-6g 0.100R	1.516 (38.51)	2.201 (55.91) 2.177 (55.30)	2.079 (52.81) 2.047 (51.99)	1.566 (39.78) 1.556 (39.52)	M41 X 1.0-6g 0.100R	1.645 (41.78) 1.635 (41.53)	1.585 (40.26) 1.575 (40.01)
21	1.594 (40.49)		M31 X 1.0-6g 0.100R	1.642 (41.71)	2.323 (59.00) 2.299 (58.39)	2.205 (56.01) 2.173 (55.19)	1.691 (42.95) 1.681 (42.70)	M44 X 1.0-6g 0.100R	1.770 (44.96) 1.760 (44.70)	1.710 (43.43) 1.700 (43.18)
23	1.720 (43.69)		M34 X 1.0-6g 0.100R	1.768 (44.91)	2.400 (60.96) 2.376 (60.35)	2.280 (57.91) 2.248 (57.10)	1.818 (46.18) 1.808 (45.92)	M47 X 1.0-6g 0.100R	1.895 (48.13) 1.885 (47.88)	1.835 (46.61) 1.825 (46.36)
25	1.843 (46.81)		M37 X 1.0-6g 0.100R	1.890 (48.01)	2.563 (65.10) 2.539 (64.49)	2.442 (62.03) 2.418 (61.42)	1.940 (49.28) 1.930 (49.02)	M50 X 1.5-6g 0.100R	2.010 (51.05) 2.000 (50.80)	1.960 (49.78) 1.950 (49.53)

© 2026 Glenair, Inc • 1211 Air Way, Glendale, CA 91201 • 818-247-6000 • www.glenair.com • U.S. CAGE code 06324 •
MIL-DTL-38999 Series III and IV · Dimensions in Inches (millimeters) are subject to change without notice.

Rev. 11.04.26