83H-85124-8 El Ochito White, PC Tail, Socket, Size #8

Use with SuperNine 233-218 PC-Tail Wall-Mount Receptacles

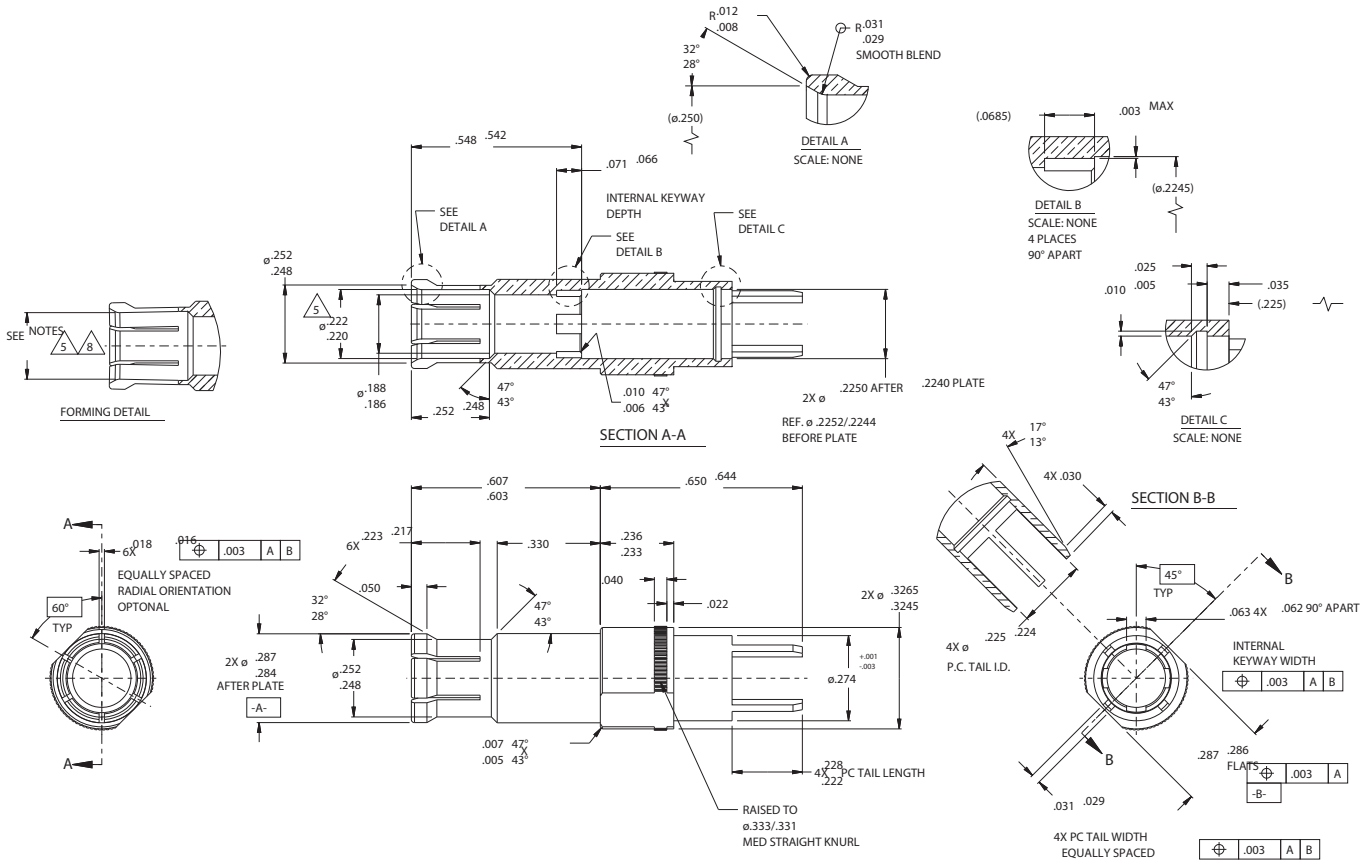

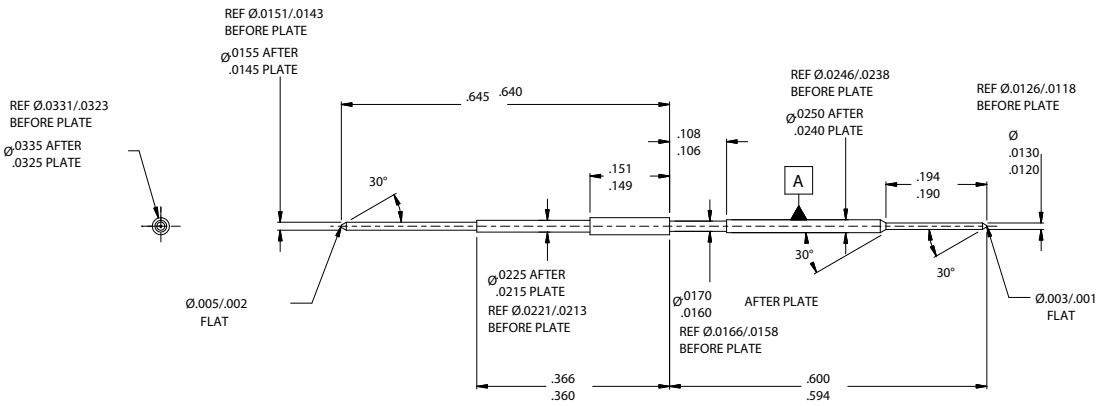

6. FINISH: GOLD PER ASTM B 488, TYPE II, CODE C
.000050-.000100 THICK PER SIDE, OVER NICKEL
SAE AMS-QQ-N-290, CL. 2, .000050-.000100 TH

PER
ICK PER SIDE.