83H-25147-8 PC Tail, Socket, Size #8 power

Use with SuperNine 233-225 PC-Tail Dual-Flange Receptacles

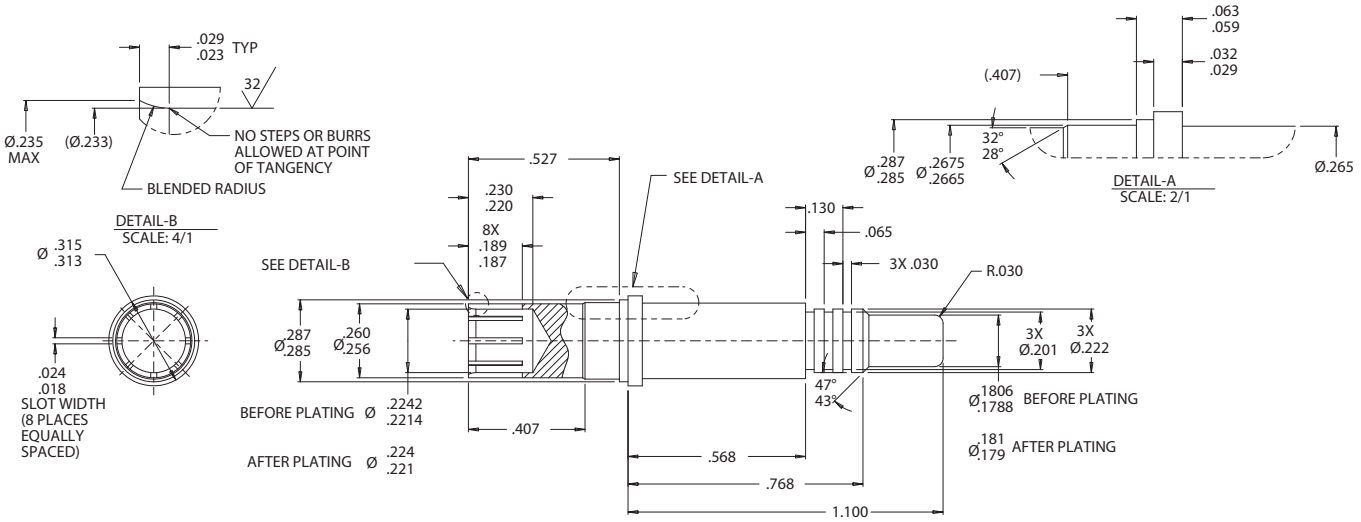

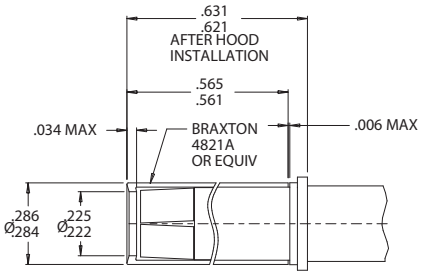

FORMING & ASSEMBLY DETAIL

SOCKET LEGS TO BE COLLAPSED AS SHOWN WITHIN .005 T.I.R. UNDER NO CIRCUMSTANCES ARE LEGS TO BE BOWED DURING OR AFTER FORMING. STAINLESS HOOD SHALL BE PRESSED ON TO CONTACT TO DIMENSIONS SHOWN AFTER PLATING.