82H-85175-8 Twinax, PC Tail, Pin, Size #8, M39029/90 type

Use with SuperNine 233-218 PC-Tail Wall-Mount Receptacles

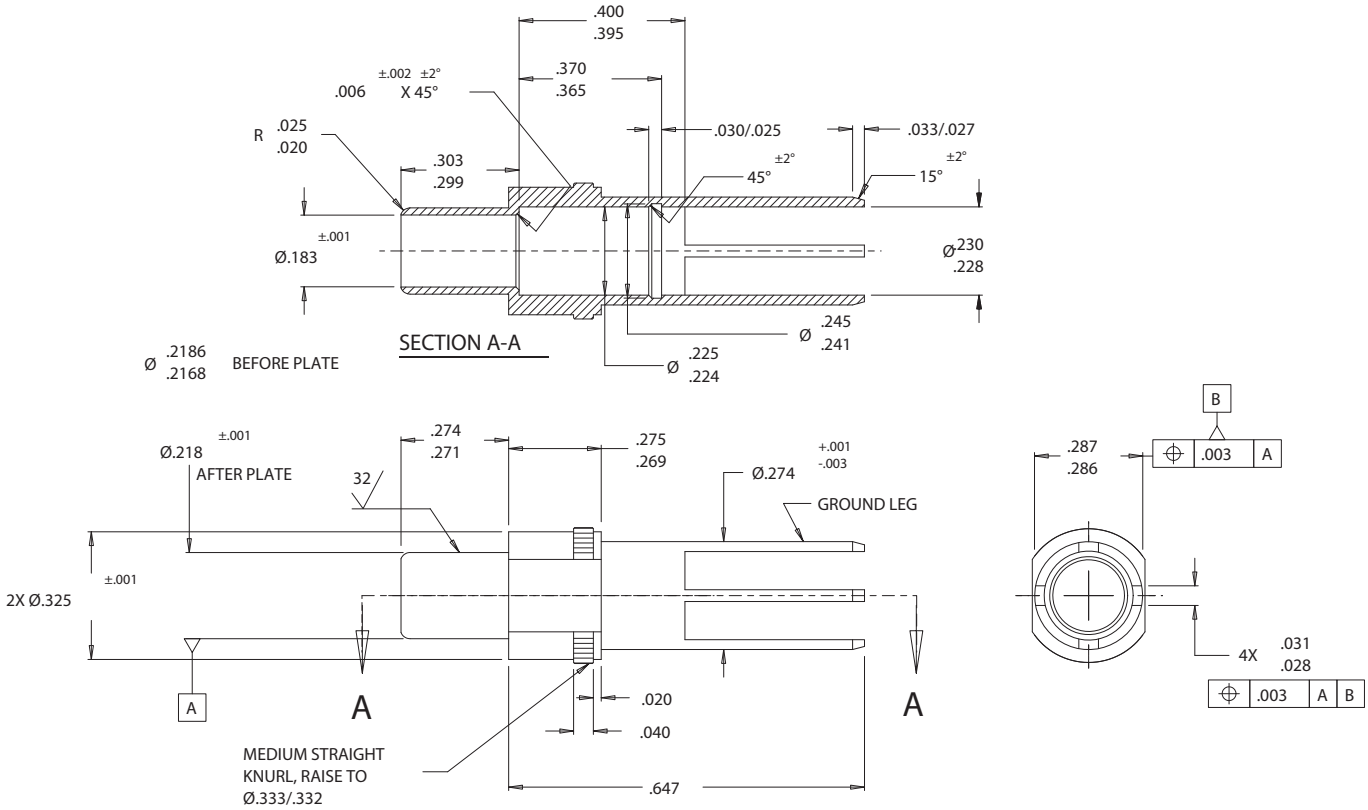

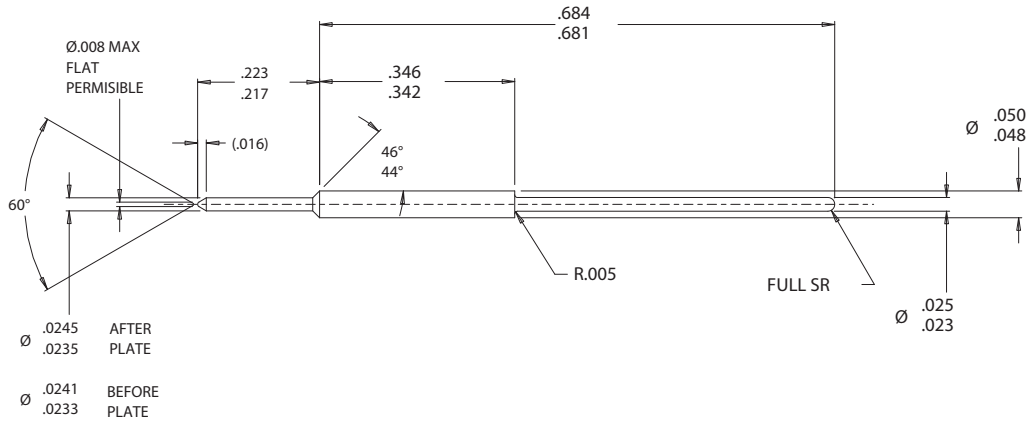

© 2020 Glenair, Inc • 1211 Air Way, Glendale, CA 91201 • 818-247-6000 • www.glenair.com • U.S. CAGE code 06324 • Glenair internal contacts catalog
Dimensions in millimeter (inches) are subject to change without notice.