82H-85129-8 Quadrax, PC Tail, Pin, Size #8, 50 Ohms

Use with SuperNine 233-218 PC-Tail Wall-Mount Receptacles

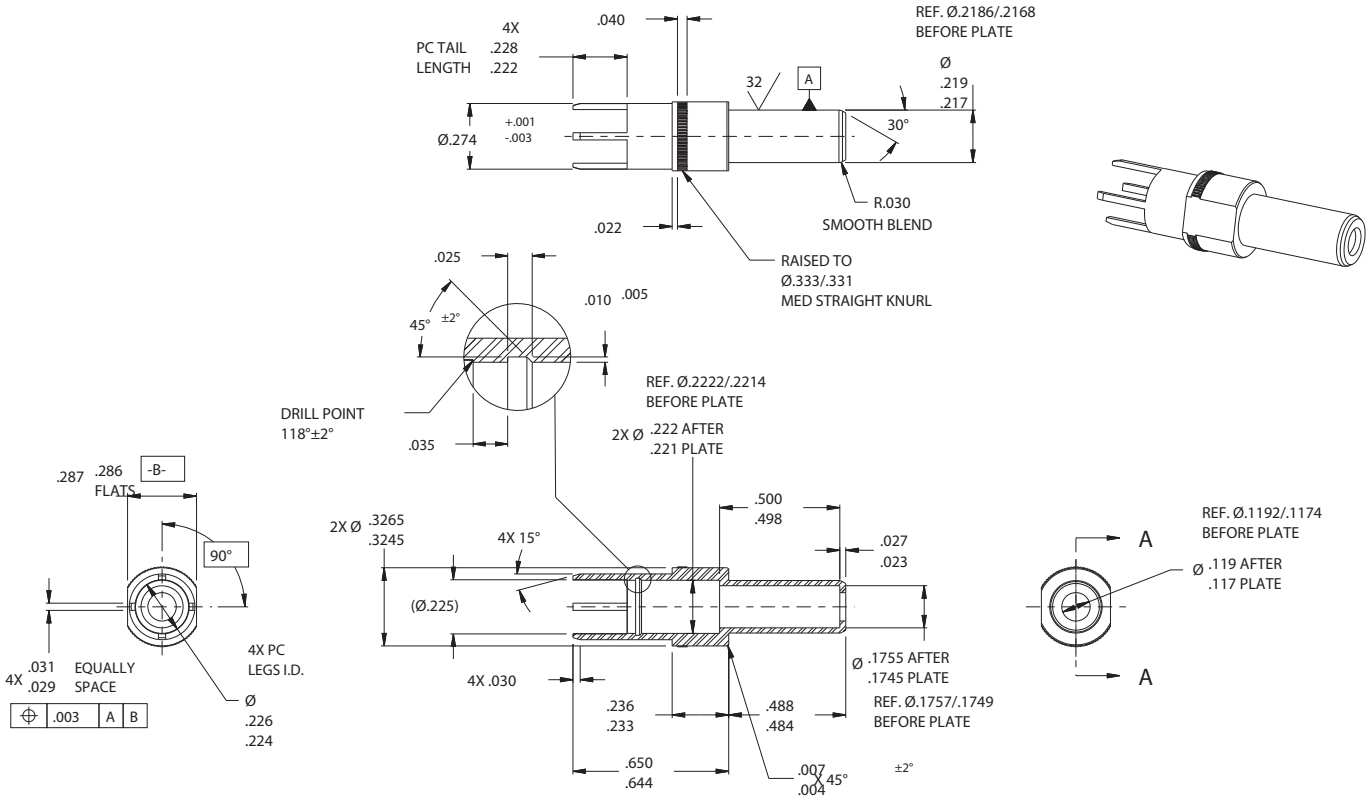

SECTION A-A

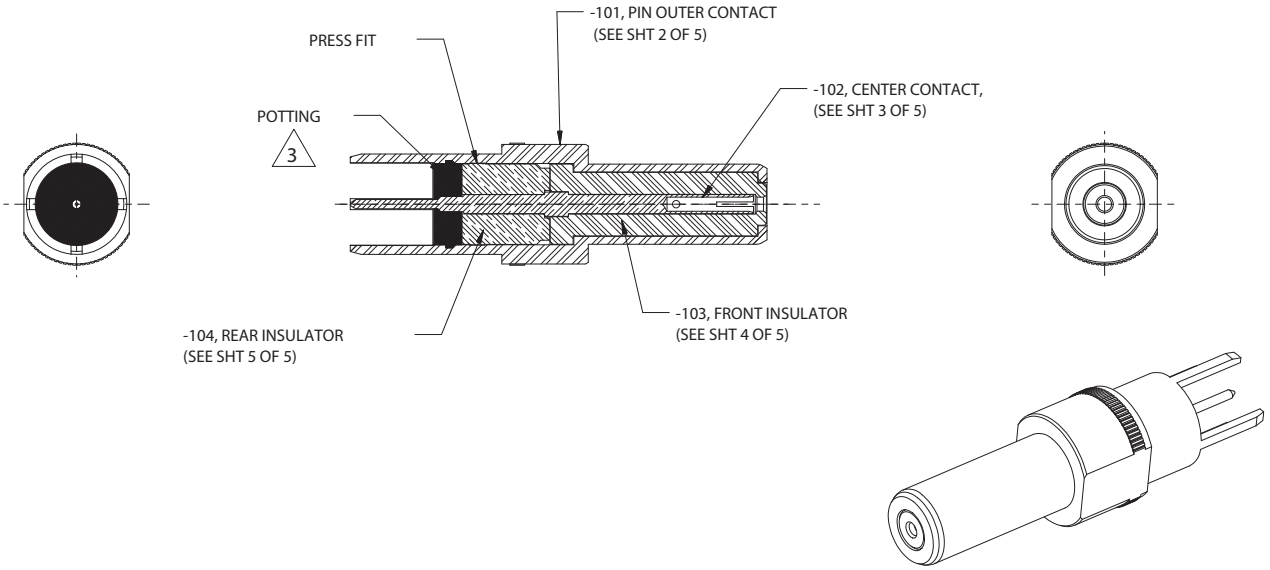

© 2020 Glenair, Inc • 1211 Air Way, Glendale, CA 91201 • 818-247-6000 • www.glenair.com • U.S. CAGE code 06324 • Glenair internal contacts catalog
Dimensions in millimeter (inches) are subject to change without notice.