792-013
Float Mount Plug

- Crimp, rear-release
- Float mount blind mate
- Socket contacts

Twinax, quadrax or El Ochito® contacts.
792-013 float mount plug has size #8 cavities for snap-in high speed data contacts (purchased separately). Combo arrangements have size #23 contacts (included with connector). Machined aluminum shell has stainless steel float bushings. Rear grommet provides environmental protection. Shell has rear threads for attaching EMI banding adapter (799-183, sold separately).

- Aerospace-grade rectangular connector with high speed size 8 datalink contacts
- 1–9 data ports
- Rugged duo-lobe aluminum shell
- Environmental

INSERT ARRANGEMENTS

Thermoplastic Insert	Grounded All-Aluminum	No. of Contacts #8	No. of Contacts #23
A-1W1	A-1G1	1	–
A-3W1		1	2
B-23W1		1	22
B-2W2	B-2G2	2	–
B-6W2		2	4
C-24W2		2	22
C-3W3	3G3	3	–
C-9W3		3	6
D-27W3		3	24
D-4W4	D-4G4	4	–
D-12W4		4	8
E-5W5	E-5G5	5	–
E-15W5		5	10
E-45W3		3	42
F-9W9	F-9G9	9	–
F-31W9		9	22

HOW TO ORDER

Sample Part Number	792-013S	D-4W4	M	G	B

Basic Part Number	**792-013S** Float Mount Plug, Socket Contacts
Shell Size-Insert Arr.	See "***Insert Arrangements***" Table
Shell Finish	**M** Electroless Nickel **MT** Nickel / PTFE **NF** Olive Drab Cadmium **TZ** Tin-Zinc **ZR** Black Zinc-Nickel
Hardware Option	**N** No Hardware *Threaded holes* **G** Guide Pins
Polarization Key Option	Enter Letter Designator for Position **A**, **B**, **C**, **D**, **E**, **F**, **G**, **H**, **J**, or **K** per Mod Code 1104 (see page C-8 for details) **Omit** for none

#8 SOCKET CONTACTS

#8 Contacts are not included with connector. See Section E for contact ordering information.

Contact Type	Application	Contact Part Number
Diff. Twinax	77 Ohm 100 Ohm	853-075
Quadrax	100BASE-T, ARINC 664	854-048
Octaxial *El Ochito®*	***Ethernet:*** 1000BASE-T, 10Gb, 40Gb	858-046 858-042
	USB 3.0	858-048 858-072
	Multi-Gig 100 Ohm: HDMI, DisplayPort, SATA	858-050 858-066
Coaxial	50 Ohm	852-148
	75 Ohm	852-150
Power	#8 AWG	850-158

CONSTRUCTION

- **Contacts:** Copper alloy, gold over nickel finish
- **Shell:** Aluminum
- **Insulators:** High performance thermoplastic
- **Wire grommet:** Fluorosilicone/silicone blend
- **Contact retaining clip:** Beryllium copper, unplated
- **Hardware:** Stainless steel

RATINGS

- **Voltage (DWV):** size 23 contacts 750 VAC
- **Current:** #23 5A
- **Operating temperature:** -65 to +150 °C
- **Durability:** 500 mating cycles
- **Shock:** 300 g
- **Vibration:** 20 g random

SIZE 23 SOCKET CONTACT

Size #23 contacts are bulk packed with connector. Spare contacts are not included and should be ordered separately if required. See "Contacts and Tools" section for additional information.

Contact Part No.	Crimp Tool	Positioner
850-164	809-015 *(M22520/2-01)*	859-215 *(K2105)*

HARDWARE OPTIONS

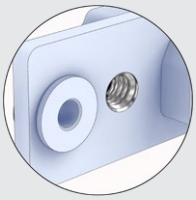

N
No Hardware
Threaded Blind Holes
10-32 UNF-2B

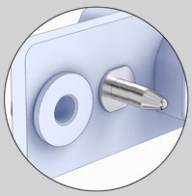

G
Guide Pins

INSTALLING AND REMOVAL TOOLS

Insertion/ Removal Tool for Size 23 Contact	Removal Tool for Size 8 Contact
809-088	859-049 *(M22520/14-12)*

Application Note
Polarization Key Positions
See Mod Code 1104 pg. C-8 for details

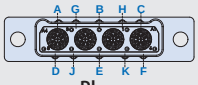

Plug

Receptacle

© 2026 Glenair, Inc • 1211 Air Way, Glendale, CA 91201 • 818-247-6000 • www.glenair.com • U.S. CAGE code 06324 • Series 79 Connectors
Dimensions in Inches (millimeters) are subject to change without notice.

792-013
Float Mount Plug

- Crimp, rear-release
- Float mount blind mate
- Socket contacts

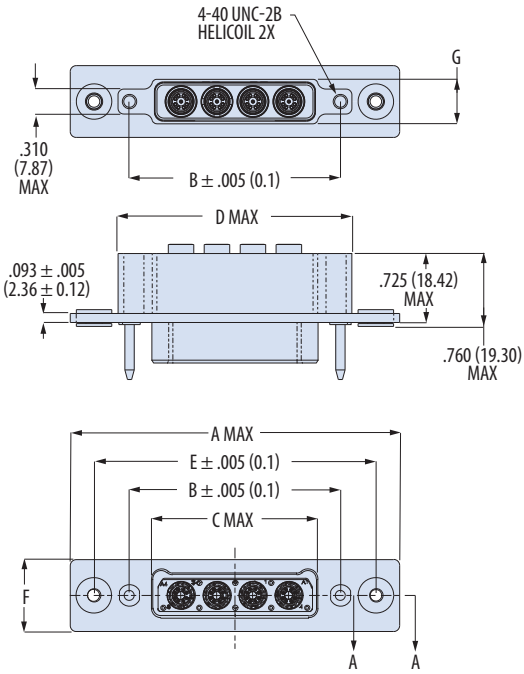

SECTION A-A

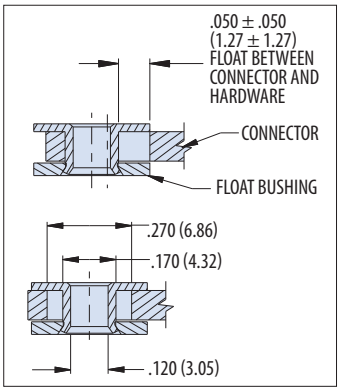

CONTACT POLARIZING KEY LOCATION

Series 792 size 8 contact cavities have a polarizing keyway. This keyway orients and aligns twinax, quadrax and El Ochito® contacts. The connector keyway is rotated 45° from top dead center. This illustration shows the location of the polarizing key and the contact numbers when looking at the mating face of the plug (socket) connector.

792-013 MATING FACE

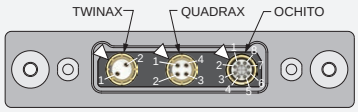

△SYMBOL SHOWS POLARIZING KEY LOCATION

Application Note

EMI Banding Backshell 799-183

See page **F-37** for backshell ordering information.

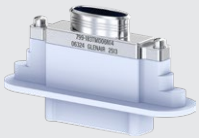

Shell Size	A Max		B ± .005 (0.1)		C Max		D Max		E ± .005 (0.1)		F Max		G Max	
	in	mm	in	mm	in	mm	in	mm	in	mm	in	mm	in	mm
A	2.317	58.85	1.075	27.31	.615	15.62	1.320	33.53	1.815	46.10	.754	19.15	.475	12.07
B	2.692	68.38	1.450	36.83	.990	25.15	1.695	43.06	2.190	55.63	.754	19.15	.475	12.07
C	3.067	77.90	1.825	46.36	1.365	34.67	2.070	52.58	2.565	65.15	.754	19.15	.475	12.07
D	3.442	87.43	2.200	55.88	1.740	44.20	2.445	62.10	2.940	74.68	.754	19.15	.475	12.07
E	3.817	96.95	2.575	65.41	2.115	53.72	2.820	71.63	3.315	84.20	.754	19.15	.475	12.07
F	3.817	96.95	2.575	65.41	2.115	53.72	2.820	71.63	3.315	84.20	1.129	28.68	.850	21.59

PANEL CUTOUT FOR 792-013 AND 792-014 FLOAT MOUNT CONNECTORS

Rear Mounting

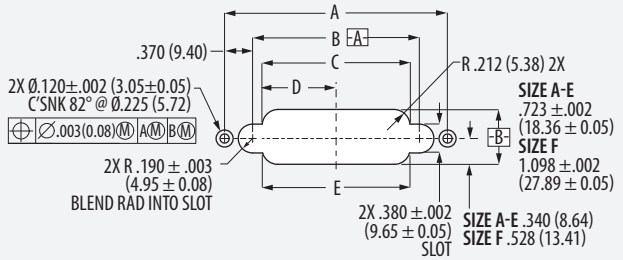

Shell Size	A Basic		B ± .002(0.06)		C		D		E	
	in	mm	in	mm	in	mm	in	mm	in	mm
A	1.815	46.10	1.075	27.31	.823	20.90	.412	10.46	.810	20.57
B	2.190	55.63	1.450	36.83	1.198	30.43	.599	15.21	1.185	30.10
C	2.565	65.15	1.825	46.36	1.573	39.95	.787	19.99	1.560	39.62
D	2.940	74.68	2.200	55.88	1.948	49.48	.974	24.74	1.935	49.15
E	3.315	84.20	2.575	65.41	2.323	59.00	1.162	29.51	2.310	58.67
F	3.315	84.20	2.575	65.41	2.323	59.00	1.162	29.51	2.323	59.00

Front Mounting

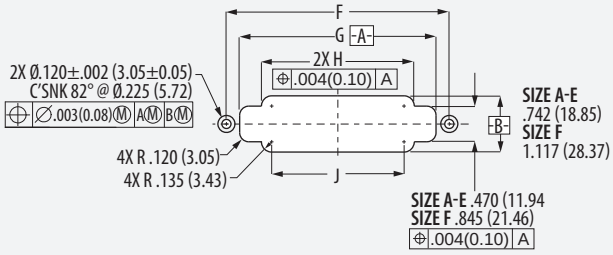

Shell Size	F Basic		G		H		J	
	in	mm	in	mm	in	mm	in	mm
A	1.815	46.10	1.465	37.21	.891	22.63	.621	15.77
B	2.190	55.63	1.840	46.74	1.266	32.16	.996	25.30
C	2.565	65.15	2.215	56.26	1.641	41.68	1.371	34.82
D	2.940	74.68	2.590	65.77	2.016	51.21	1.746	44.35
E	3.315	84.20	2.965	75.31	2.391	60.73	2.121	53.87
F	3.315	84.20	2.965	75.31	2.391	60.73	2.121	53.87

© 2026 Glenair, Inc • 1211 Air Way, Glendale, CA 91201 • 818-247-6000 • www.glenair.com • U.S. CAGE code 06324 • Series 79 Connectors
Dimensions in Inches (millimeters) are subject to change without notice.