Swing-Arm® Clamps

for MIL-DTL-38999 Series I and II Connectors

870F005 Swing-Arm Saddle Clamp, EMI Banding Adapter, Aluminum/SST

Self-Locking

Shielded, self-locking, adjustable arms. 870F005 aluminum or stainless steel Swing-Arm saddle clamp fits MIL-DTL-38999 Series I and II connectors. Adjustable arms pivot to 0°, 45° or 90° positions. Banding adapter has optional "T" slots for pigtailed individual shields. Terminate shield braid to adapter with optional Band-Master ATS® pre-coiled banding strap. Full radius saddles with self-locking clinch nuts. Available in two clamp sizes: standard clamp fits most wire bundles, large clamp has increased clearance for oversize wire bundles. Coupling nut has anti-decoupling mechanism for audible detented coupling and prevents backoff under high vibration.

Adapter Code F

This accessory fits these connectors:
MIL-DTL-38999 Series I and Series II

TABLE 1 MATERIAL / FINISH

Aluminum	
M	Electroless nickel
MT	Nickel-PTFE
NF	Olive drab cadmium
NFS	Olive drab cadmium, selective (fig. 1)
TZ	Tin-zinc
ZR	Black zinc-nickel
Stainless Steel, Passivated	
BM	Brass interface ring, nickel plated
BMT	Brass interface ring, nickel-PTFE plated
Z1	SST interface ring, passivated
ZM	SST interface ring, nickel plated

PART NUMBER

	870F005	M	22	A	S	K

Base P/N — **870F005**

Material/Finish — *See Table 1*

Shell Size

Shell Size									
38999 Series I	9	11	13	15	17	19	21	23	25
38999 Series II	8	10	12	14	16	18	20	22	24
Size Code	08	10	12	14	16	18	20	22	24

Clamp Size
- **A** Standard Clamp
- **B** Large Clamp

Banding Adapter Slots
Omit if not required. See Figure 2.
- **S** "T" Slots in Banding Adapter for Shield Pigtails

Band
Omit if not required.
- **K** Pre-Coiled Micro Band included With Clamp
- **J** Pre-Coiled Slim Micro Band included With Clamp

FIGURE 1
MATERIAL/ FINISH CODE *NFS*

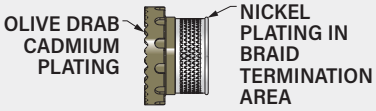

FIGURE 2
BANDING ADAPTER SLOTS

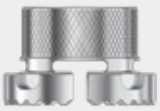

Route pigtail shield braids into optional "T" slots in banding adapter.

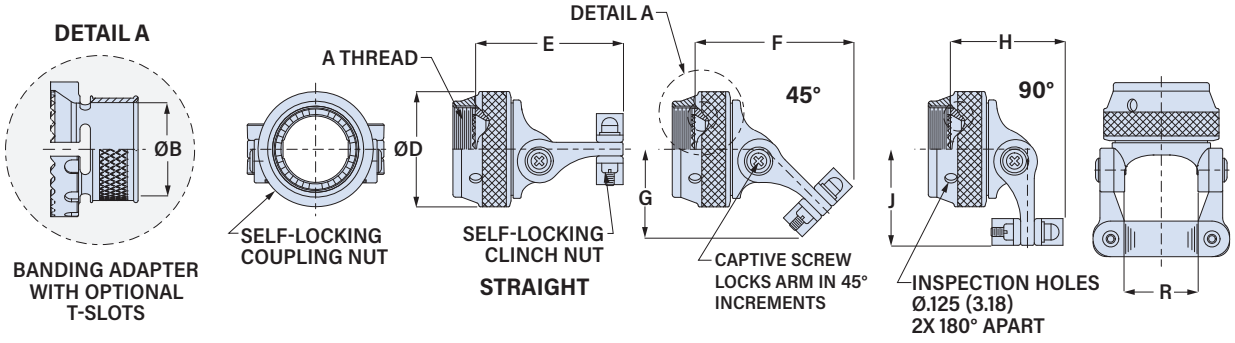

Shell Size	A Thread UNEF-2B	ø B Min in	ø B Min mm	D Max in	D Max mm	E Max in	E Max mm	F Max in	F Max mm	G Max in	G Max mm	H Max in	H Max mm	J Max in	J Max mm	R Ref. in	R Ref. mm
8/9	0.4375-28	.178	4.5	.812	20.6	1.55	39.4	1.45	36.8	.77	19.6	.98	24.9	.87	22.1	.393	10.0
10/11	0.5625-24	.305	7.7	.938	23.8	1.61	40.9	1.56	39.6	.87	22.1	1.05	26.7	.96	24.4	.455	11.6
12/13	0.6875-24	.404	10.3	1.125	28.6	1.66	42.2	1.71	43.4	.97	24.6	1.22	31.0	1.03	26.2	.598	15.2
14/15	0.8125-20	.526	13.4	1.250	31.8	1.67	42.4	1.79	45.5	1.02	25.9	1.32	33.5	1.10	27.9	.710	18.0
16/17	0.9375-20	.631	16.0	1.375	34.9	1.77	45.0	1.88	47.8	1.08	27.4	1.38	35.1	1.16	29.5	.839	21.3
18/19	1.0625-18	.748	19.0	1.500	38.1	1.77	45.0	1.96	49.8	1.13	28.7	1.49	37.8	1.22	31.0	.934	23.7
20/21	1.1875-18	.877	22.3	1.625	41.3	1.92	48.8	2.13	54.1	1.24	31.5	1.61	40.9	1.29	32.8	1.068	27.1
22/23	1.3125-18	.999	25.4	1.750	44.5	1.95	49.5	2.20	55.9	1.30	33.0	1.68	42.7	1.36	34.5	1.197	30.4
24/25	1.4375-18	1.127	28.6	1.875	47.6	2.10	53.3	2.31	58.7	1.39	35.3	1.75	44.5	1.55	39.4	1.323	33.6

© 2022 Glenair, Inc • 1211 Air Way, Glendale, CA 91201 • 818-247-6000 • www.glenair.com • U.S. CAGE code 06324 • Circular Connector Accessories
Dimensions in Inches (millimeters) are subject to change without notice.

Swing-Arm® Clamps

for MIL-DTL-38999 Series I and II Connectors

870F005 Swing-Arm Saddle Clamp, EMI Banding Adapter, Aluminum/SST

CLAMP DIMENSIONS

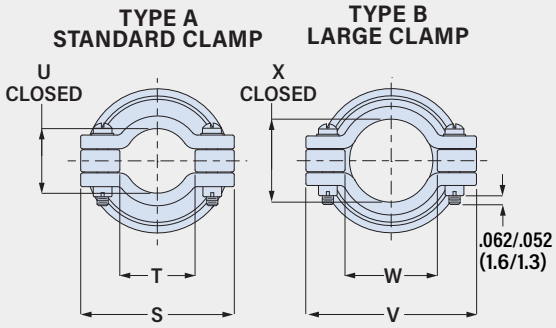

Shell Size	Standard Clamp S Max in	S Max mm	T Min in	T Min mm	U Ref. in	U Ref. mm	Large Clamp Shell Size	V Max in	V Max mm	W Min in	W Min mm	X Ref. in	X Ref. mm
08	.97	24.6	.22	5.6	.264	6.7	08	.98	24.9	.33	8.4	.356	9.0
10	1.03	26.2	.29	7.4	.310	7.9	10	1.20	30.5	.45	11.4	.422	10.7
12	1.21	30.7	.34	8.6	.422	10.7	12	1.45	36.8	.62	15.7	.637	16.2
14	1.32	33.5	.45	11.4	.538	13.7	14	1.54	39.1	.68	17.3	.707	18.0
16	1.45	36.8	.55	14.0	.590	15.0	16	1.60	40.6	.80	20.3	.759	19.3
18	1.54	39.1	.65	16.5	.660	16.8	18	1.73	43.9	.90	22.9	.841	21.4
20	1.67	42.4	.74	18.8	.744	18.9	20	1.95	49.5	1.05	26.7	.996	25.3
22	1.79	45.5	.87	22.1	.826	21.0	22	2.08	52.8	1.18	30.0	1.060	26.9
24	1.92	48.8	.99	25.1	.896	22.8	24	2.32	58.9	1.30	33.0	1.124	28.5

MATERIAL/FINISH

Aluminum *(Codes M, MT, NF, NFS TZ, ZR)*
- **Coupling nut, body, arms, saddles**: aluminum
- **Screws, washers, inserts**: stainless steel/ passivated
- **Anti-decoupling springs**: thermoplastic
- **Clinch nuts**: Codes M, MT, TZ and ZR: stainless steel, silver plated. Code NF, NFS: stainless steel/ olive drab cadmium
- **Banding adapter**: aluminum
- **Band (optional)**: stainless steel/ passivated

Stainless Steel *(Codes BM, BMT, Z1, ZM)*
- **Coupling nut, body, arms, saddles, anti-decoupling springs, screws, washers, inserts**: stainless steel, passivated
- **Clinch nuts**: stainless steel, silver plated
- **Banding adapter**:
  - Code BM: brass/ electroless nickel
  - Code BMT: brass/ nickel-PTFE
  - Code Z1: stainless steel/ passivated
  - Code ZM: stainless steel/ electroless nickel
- **Band (optional)**: stainless steel/ passivated

BAND INFORMATION

Terminate cable braid to band adapter with optional pre-coiled banding strap. Glenair's Band-Master ATS® banding system provides quick, easy, cost-effective and highly reliable termination. Band is passivated stainless steel.

Band

Micro Band Tool
601-101

Slim Micro Band Tool
601-122

Shell Size	Pre-Coiled Micro Band Part No.	Pre-Coiled Slim Micro Band Part No.	Length in	Length mm	Max Diameter in	Max Diameter mm
8 – 12	601-061	601-601	8.125	206	.88	22.4
14 – 24	601-065	601-603	14.25	362	1.88	47.8

© 2022 Glenair, Inc • 1211 Air Way, Glendale, CA 91201 • 818-247-6000 • www.glenair.com • U.S. CAGE code 06324 • Circular Connector Accessories
Dimensions in Inches (millimeters) are subject to change without notice.