Swing-Arm® Clamps

for MIL-DTL-38999 Series I and II Connectors

870F003 Swing-Arm Saddle Clamp, Braid Sock, SST/Aluminum

Self-Locking

Shielded, self-locking, adjustable arms. 870F003 stainless steel or aluminum Swing-Arm saddle clamp fits MIL-DTL-38999 Series I and II connectors. Adjustable arms pivot to 0°, 45° or 90° positions. Supplied with 12 inches (305 mm) of shield braid attached to metal interface ring. Braid choices include 34 AWG nickel/copper, 34 AWG tin/copper, ultralightweight AmberStrand® or microfilament nickel/SST Armorlite®. Full radius saddles have self-locking clinch nuts. Available in two clamp sizes: standard clamp fits most wire bundles, large clamp has increased clearance for oversize wire bundles. Coupling nut has anti-decoupling mechanism for audible detented coupling and prevents backoff under high vibration.

Adapter Code F

This accessory fits these connectors:
MIL-DTL-38999 Series I and Series II

TABLE 1 MATERIAL / FINISH

Aluminum	
M	Electroless nickel
NF	Olive drab cadmium, selective (fig. 1)
MT	Nickel-PTFE
TZ	Tin-zinc
ZR	Black zinc-nickel
Stainless Steel, Passivated	
BM	Brass interface ring, nickel plated
BMT	Brass interface ring, nickel-PTFE plated
Z1	SST interface ring, passivated
ZM	SST interface ring, nickel plated

PART NUMBER

870F003 M 12 B L K 14

Base P/N	**870F003**
Material/Finish	*See Table 1*
Shell Size	Shell Size: 38999 Series I: 9, 11, 13, 15, 17, 19, 21, 23, 25; 38999 Series II: 8, 10, 12, 14, 16, 18, 20, 22, 24; Size Code: **08, 10, 12, 14, 16, 18, 20, 22, 24**
Clamp Size	*See Clamp Dimensions on next page* **A** Standard Clamp **B** Large Clamp
Braid Type	**N** 34 AWG Nickel/Copper Braid **T** 34 AWG Tin/Copper Braid **A** AmberStrand® Nickel/Composite Braid **L** Microfilament ArmorLite® Nickel/SST Braid
Splice Ring and Band	*Omit if not required. See "Splice Ring and Band" on next page.* **K** Splice ring and standard band **J** Splice ring and slim standard band
Braid Length	*Omit for standard 12 inch length* **14** Length in 1 inch increments, 6 inch min "14" = 14 inches.

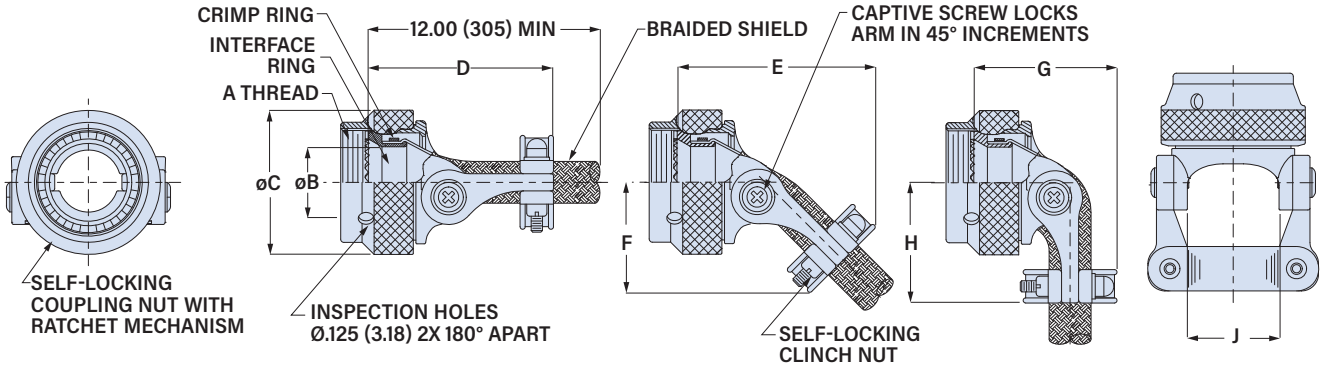

Shell Size	A Thread UNEF-2B	ø B Min in	ø B Min mm	ø C Max in	ø C Max mm	D Max in	D Max mm	E Max in	E Max mm	F Max in	F Max mm	G Max in	G Max mm	H Max in	H Max mm	J Ref. in	J Ref. mm
8/9	0.4375-28	.264	6.7	.812	20.6	1.50	38.1	1.43	36.3	.76	19.3	.95	24.1	.84	21.3	.393	10.0
10/11	0.5625-24	.392	10.0	.938	23.8	1.54	39.1	1.49	37.8	.82	20.8	.99	25.1	.90	22.9	.455	11.6
12/13	0.6875-24	.506	12.9	1.125	28.6	1.62	41.1	1.64	41.7	.92	23.4	1.14	29.0	1.00	25.4	.598	15.2
14/15	0.8125-20	.631	16.0	1.250	31.8	1.63	41.4	1.73	43.9	.98	24.9	1.24	31.5	1.07	27.2	.710	18.0
16/17	0.9375-20	.756	19.2	1.375	34.9	1.73	43.9	1.86	47.2	1.08	27.4	1.36	34.5	1.13	28.7	.839	21.3
18/19	1.0625-18	.844	21.4	1.500	38.1	1.73	43.9	1.93	49.0	1.12	28.4	1.46	37.1	1.20	30.5	.934	23.7
20/21	1.1875-18	.970	24.6	1.625	41.3	1.88	47.8	2.08	52.8	1.21	30.7	1.55	39.4	1.26	32.0	1.068	27.1
22/23	1.3125-18	1.094	27.8	1.750	44.5	1.91	48.5	2.15	54.6	1.27	32.3	1.63	41.4	1.33	33.8	1.197	30.4
24/25	1.4375-18	1.219	31.0	1.875	47.6	1.94	49.3	2.23	56.6	1.33	33.8	1.70	43.2	1.40	35.6	1.323	33.6

© 2022 Glenair, Inc • 1211 Air Way, Glendale, CA 91201 • 818-247-6000 • www.glenair.com • U.S. CAGE code 06324 • Circular Connector Accessories
Dimensions in Inches (millimeters) are subject to change without notice.

Swing-Arm® Clamps

for MIL-DTL-38999 Series I and II Connectors

870F003 Swing-Arm Saddle Clamp, Braid Sock, SST/Aluminum

CLAMP DIMENSIONS

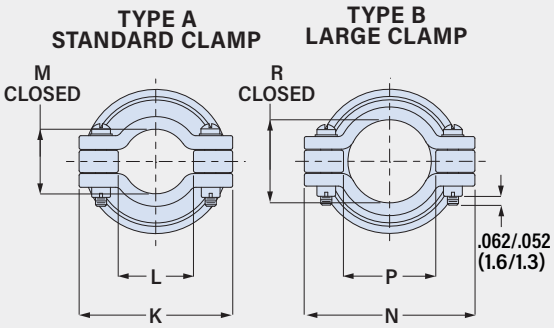

Shell Size	Standard Clamp K Max in	K Max mm	L Min in	L Min mm	M Ref. in	M Ref. mm	Large Clamp N Max in	N Max mm	P Min in	P Min mm	R Ref. in	R Ref. mm
08	.98	24.9	.22	5.6	.265	6.7	.98	24.9	.33	8.4	.356	9.0
10	1.05	26.7	.27	6.9	.310	7.9	1.20	30.5	.45	11.4	.422	10.7
12	1.20	30.5	.35	8.9	.422	10.7	1.45	36.8	.62	15.7	.637	16.2
14	1.30	33.0	.47	11.9	.538	13.7	1.54	39.1	.68	17.3	.707	18.0
16	1.44	36.6	.55	14.0	.590	15.0	1.60	40.6	.80	20.3	.759	19.3
18	1.56	39.6	.62	15.7	.660	16.8	1.73	43.9	.90	22.9	.841	21.4
20	1.69	42.9	.70	17.8	.744	18.9	1.95	49.5	1.05	26.7	.996	25.3
22	1.77	45.0	.78	19.8	.826	21.0	2.08	52.8	1.18	30.0	1.060	26.9
24	1.89	48.0	.85	21.6	.896	22.8	2.32	58.9	1.30	33.0	1.124	28.5

MATERIAL/FINISH

Aluminum *(Codes M, MT, NF, TZ, ZR)*
- **Coupling nut, body, arms, saddles, interface ring:** aluminum
- **Crimp Ring:** copper alloy/ tin plated
- **Screws, washers, inserts:** stainless steel/ passivated
- **Anti-decoupling spring:** thermoplastic
- **Clinch nuts:** Codes M, MT, TZ and ZR: stainless steel, silver plated. Code NF: stainless steel/ olive drab cadmium

Stainless Steel *(Codes BM, BMT, Z1, ZM)*
- **Coupling nut, body, arms, saddles, anti-decoupling springs, screws, washers, inserts:** stainless steel, passivated
- **Crimp Ring:** copper alloy/ tin plated
- **Clinch nuts:** stainless steel, silver plated
- **interface ring:** brass (codes BM, BMT) or stainless steel (Z1, ZM)

Braid:
- **Code N:** 34 AWG nickel-coated copper
- **Code T:** 34 AWG tin-coated copper,
- **Code A:** ***AmberStrand®*** ultralightweight nickel-coated polymer
- **Code L:** ***ArmorLite®*** lightweight microfilament nickel-coated 316L stainless steel

FIGURE 1
NF SELECTIVE FINISH

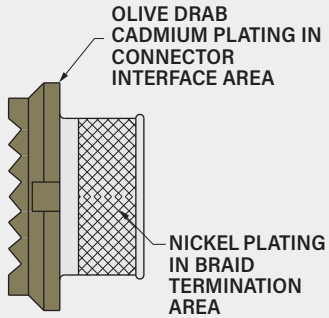

INTERFACE RING

INTERFACE RING AND BRAID

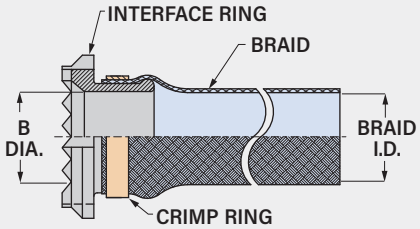

Shell Size	ø B Min in	ø B Min mm	Braid I.D. in	Braid I.D. mm
08	.264	6.7	.375	9.5
10	.392	10.0	.375	9.5
12	.506	12.9	.500	12.7
14	.631	16.0	.500	12.7
16	.756	19.2	.781	19.8
18	.844	21.4	.781	19.8
20	.970	24.6	1.000	25.4
22	1.094	27.8	1.000	25.4
24	1.219	31.0	1.250	31.8

SPLICE RING AND PRE-COILED BAND (K AND J OPTIONS)

Optional splice ring provides a reliable, low resistance method of splicing Swing-Arm braid sock to wire bundle braid. Snap splice ring over wire bundle, then overlap braid sock, pigtails and cable braid. Install band around splice ring and braid using Band-Master ATS banding tool. ***Slim Standard Band*** is 50% lighter weight than standard band with no reduction in strength.

Splice Ring

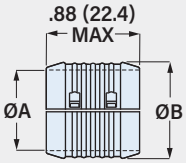

687-207
SPLICE RING

Band

Standard Band Tool
601-100

Slim Standard Band Tool
601-109

Shell Size	Band Part Number Standard	Band Part Number Slim Standard	Split Ring Part Number	øA ± .03 (0.8) in	øA ± .03 (0.8) mm	øB ± .03 (0.8) in	øB ± .03 (0.8) mm
08	601-006	601-571	687-207XB04	.25	6.4	.40	10.2
10	601-006	601-571	687-207XB06	.38	9.7	.53	13.5
12	601-006	601-571	687-207XB08	.50	12.7	.65	16.5
14	601-006	601-571	687-207XB10	.63	16.0	.78	19.8
16	601-006	601-571	687-207XB12	.75	19.1	.90	22.9
18	601-041	601-572	687-207XB14	.88	22.4	1.03	26.2
20	601-041	601-573	687-207XB16	1.00	25.4	1.15	29.2
22	601-041	601-573	687-207XB18	1.13	28.7	1.28	32.5
24	601-041	601-573	687-207XB20	1.25	31.8	1.40	35.6

© 2022 Glenair, Inc • 1211 Air Way, Glendale, CA 91201 • 818-247-6000 • www.glenair.com • U.S. CAGE code 06324 • Circular Connector Accessories

Dimensions in Inches (millimeters) are subject to change without notice.