Series 62 Saddle Clamps

for MIL-DTL-38999 Series I and II Connectors

620F*012 Saddle Clamp, General Purpose

Spin coupling, general purpose. 620F*012 saddle clamp fits MIL-DTL-38999 Series I and II connectors. For use with open bundle wiring harnesses and closed bundle (jacketed) harnesses. Aluminum coupling nut and frame, 300 series stainless steel hardware.

Adapter Code F

This accessory fits these connectors:
MIL-DTL-38999 Series I and Series II

MATERIAL/FINISH

Body, saddles, coupling nut: aluminum
Screws, washers, clinch nuts: stainless steel

PART NUMBER

	620FS012	NF	08

Base P/N

620FS012	Straight
620FA012	90°

Material/Finish

C	Black Anodize
M	Electroless Nickel
MT	Nickel-PTFE
NF	Olive Drab Cadmium
ZR	Black Zinc-Nickel
TZ	Tin-Zinc

Size Code

Shell Size									
38999 Series I	9	11	13	15	17	19	21	23	25
38999 Series II	8	10	12	14	16	18	20	22	24
Size Code	08	10	12	14	16	18	20	22	24

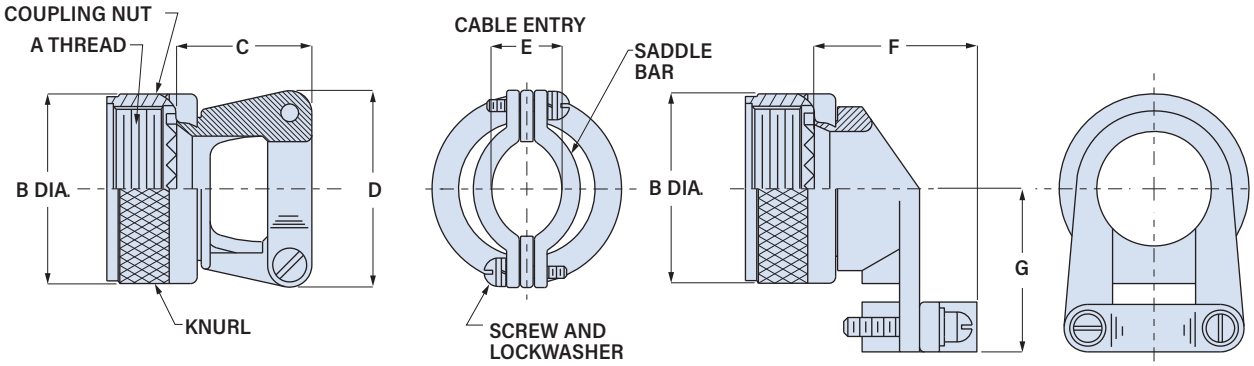

Shell Size	A Thread UNEF-2B	øB Max. in	øB Max. mm	C Max. in	C Max. mm	D Max. in	D Max. mm	E Cable Entry Closed in	E Closed mm	E Open in	E Open mm	F Max. in	F Max. mm	G Max. in	G Max. mm	Screw Size
8/9	0.4375-28	.650	16.5	.555	14.1	.752	19.1	.098	2.5	.234	5.9	.704	17.9	.808	20.5	6-32
10/11	0.5625-24	.770	19.6	.665	16.9	.832	21.1	.153	3.9	.234	5.9	.786	20.0	.867	22.0	6-32
12/13	0.6875-24	.890	22.6	.790	20.1	.988	25.1	.190	4.8	.328	8.3	.979	24.9	.929	24.0	6-32
14/15	0.8125-20	1.020	25.9	.790	20.1	1.046	26.6	.260	6.6	.457	11.6	1.039	26.4	.992	25.2	6-32
16/17	0.9375-20	1.150	29.2	.915	23.2	1.319	33.5	.283	7.2	.614	15.6	1.188	30.2	1.056	26.8	6-32
18/19	1.0625-18	1.230	31.2	1.165	29.6	1.451	36.9	.325	8.3	.634	16.1	1.300	33.1	1.233	31.3	8-32
20/21	1.1875-18	1.360	34.5	1.290	32.8	1.557	39.6	.343	8.7	.698	17.7	1.425	36.2	1.296	32.9	8-32
22/23	1.3125-18	1.480	37.6	1.415	35.9	1.653	42.0	.381	9.7	.823	20.9	1.550	39.4	1.358	34.5	8-32
24/25	1.4375-18	1.730	43.9	1.540	39.1	1.775	45.1	.418	10.6	.853	21.7	1.675	42.6	1.420	36.1	8-32

© 2022 Glenair, Inc • 1211 Air Way, Glendale, CA 91201 • 818-247-6000 • www.glenair.com • U.S. CAGE code 06324 • Circular Connector Accessories
Dimensions in Inches (millimeters) are subject to change without notice.