D-Subminiature Backshell Exploded View
Cable Mounted Plug
Front Mounted Receptacle

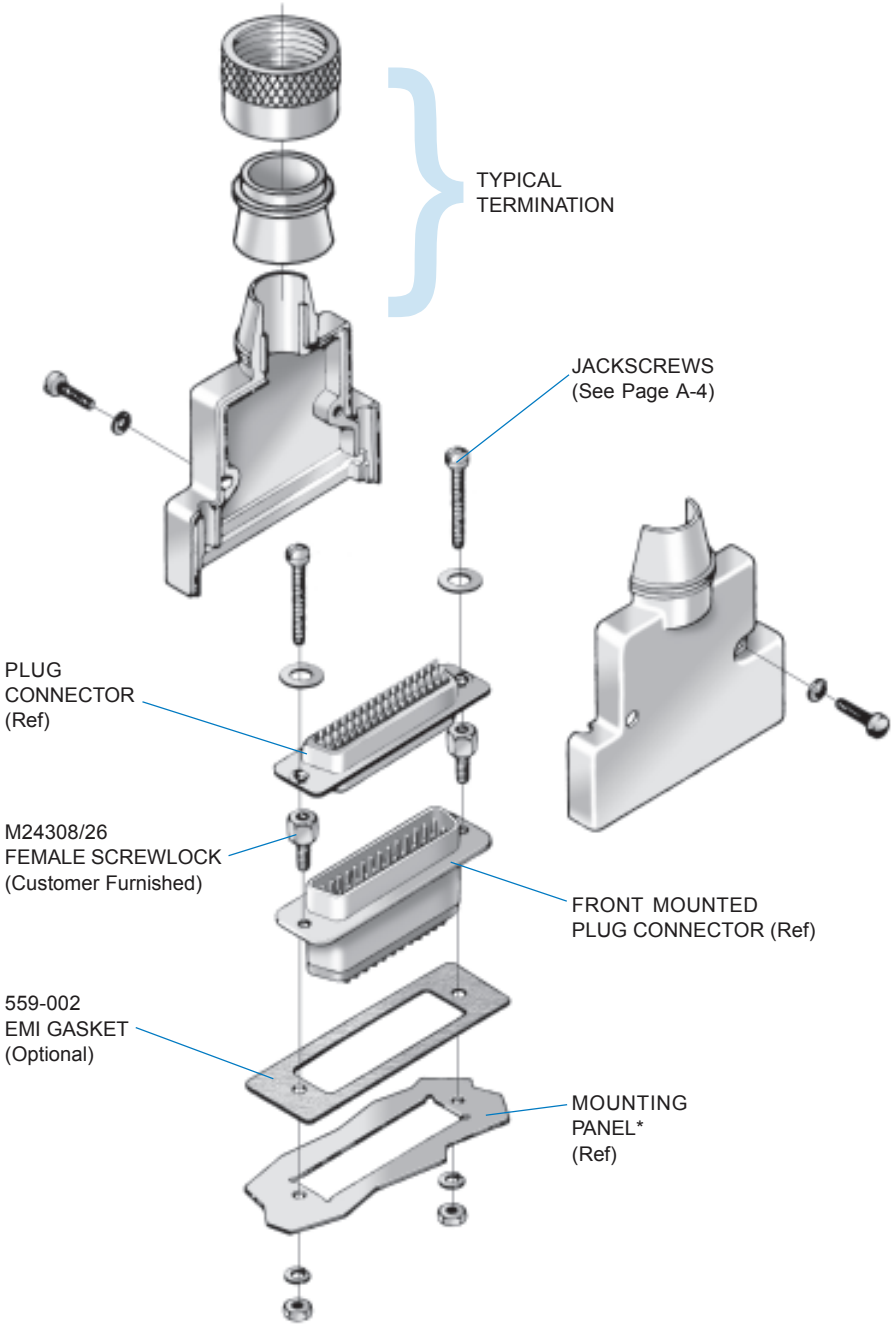

*All components front-mounted in relationship to the panel.

© 2004 Glenair, Inc.

GLENAIR, INC. • 1211 AIR WAY • GLENDALE, CA 91201-2497 • 818-247-6000 • FAX 818-500-9912
www.glenair.com
E-Mail: sales@glenair.com