319-043
EMI/RFI Shield Sock Shrink Boot Adapter
with Optional Shrink Boot
Standard Profile - Direct Coupling

CONNECTOR DESIGNATORS

A-B*-C-D-E-F

G-H-J-K-L-S

*** Conn. Desig. B See Note 6**

DIRECT COUPLING

319 F J 043 M 16 06-6-4 T

- Product Series
- Connector Designator
- Angle and Profile
  - J = 90°
  - H = 45°
  - S = Straight
- Basic Part No.
- Finish (Table II)
- Shrink Boot (Table IV - Omit for None)
- Length: S only (1/2 inch increments: e.g. 4 = 2 inches)
- Shield Length (1 inch increments: Minimum 6 inches)
- Cable Entry (Table V)
- Shell Size (Table I)

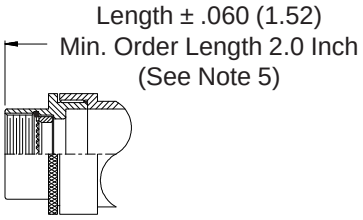

STYLE 2 (STRAIGHT See Note 7)

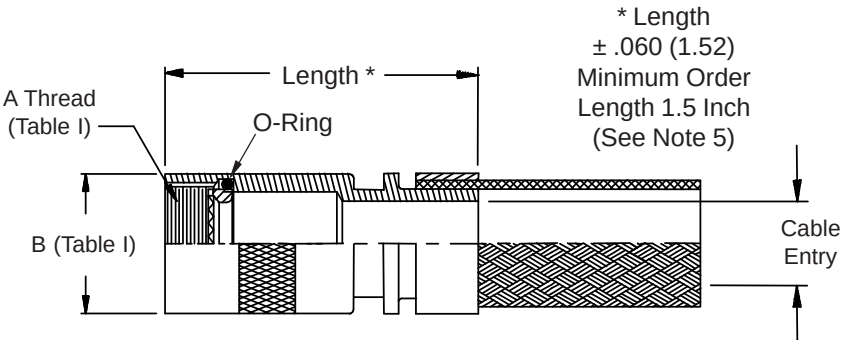

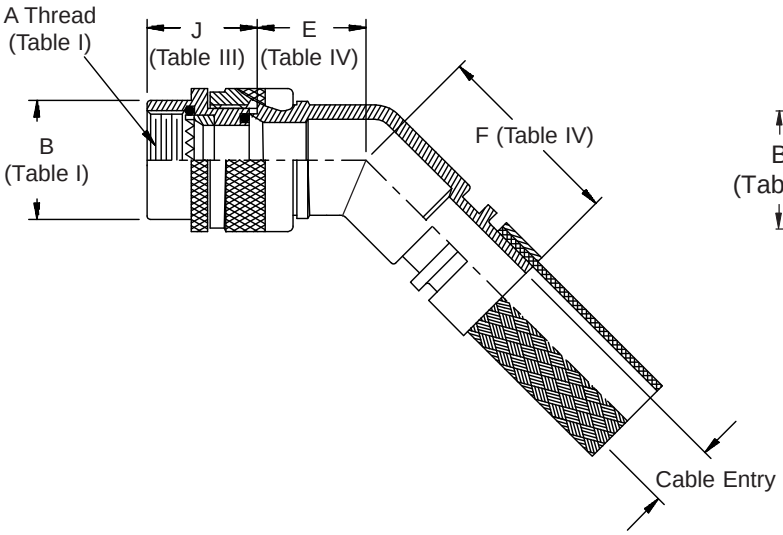

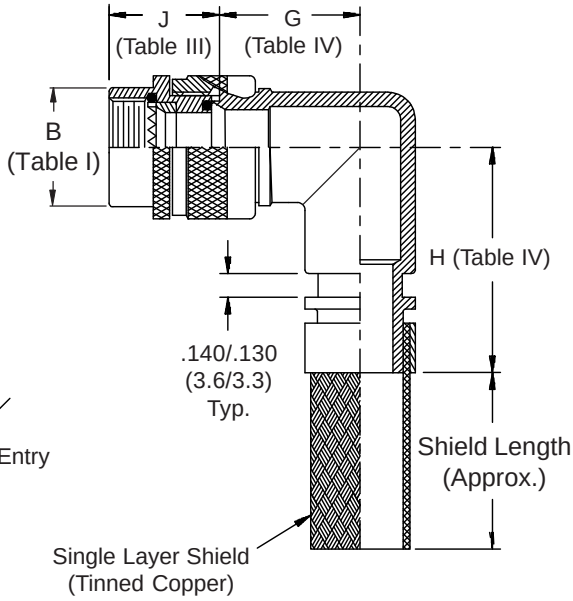

© 2005 Glenair, Inc. CAGE Code 06324 Printed in U.S.A.