RJ45 CAT 5e TVS connectors

244-003 Wall mount receptacle, PC tail or solder cup
MIL-DTL-38999 Series III Type Connectors

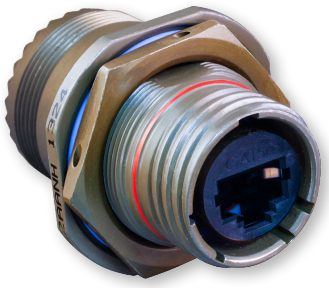

Material and Finish	
NF	Aluminum/Cadmium Olive Drab
ME	Aluminum/Electroless Nickel
MT	Aluminum/Nickel PTFE
ZR	Aluminum/Black Zinc-Nickel

Part Number Development							
Sample Part Number	**244-003**	**NF**	**19**	**P**	**G**	**N**	**1**
Basic Number	**244-003** with accessory thread						
Finish	See Material and Finish Table						
Shell Size	**17** or **19**						
Termination	**P** = PC tail **S** = Solder cup						
Insert-to-Shell Grounding	**G** = Shielded and grounded to shell						
Alternate Key Position[1]	Per MIL-DTL-38999 **A**, **B**, **C**, **D**, **E**, **N** = Normal						
RJ45 Orientation	**1**, **2**, **3**, or **4**						

B

NOTES

1. See Section A for alternate key/keyway positions and panel cutout dimensions
2. See page B-24 for diode values

All external dimensions, features, etc. compliant with D38999/20, /24, &/26. Consult factory for additional information.

RJ45 ORIENTATION CODE AND PCB LAYOUT (PCB LAYOUT FOR PC TAIL VERSION)

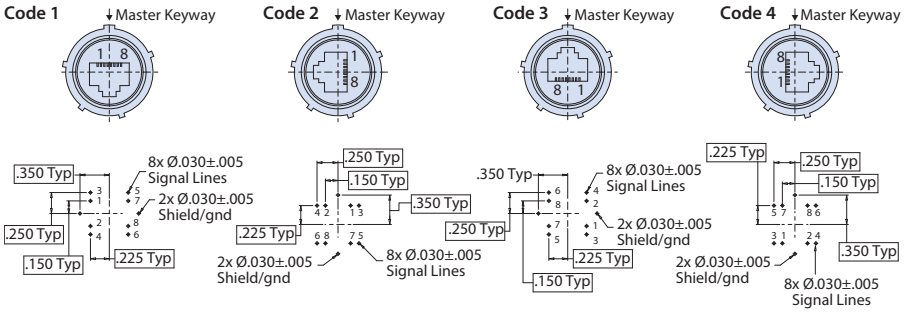

Component Mounting Side

Jam Nut Dimensions												
Shell Size	A Thread	B Thread	C		D Sq.		Ø E		Ø F		G Flat	
			in	mm	in	mm	in	mm				
17	1.1875-.1P-.3L-TS-2A	M32 x 1.0-6g 0.100R	.122 .083	3.10 2.11	1.642 1.610	41.71 40.89	1.764 1.740	44.81 44.17	1.270 1.260	32.26 32.00	1.210 1.200	30.73 30.48
19	1.2500-.1P-.3L-TS-2A	M35 x 1.0-6g 0.100R	.154 .114	3.91 2.90	1.827 1.795	46.41 45.59	1.949 1.925	49.50 48.90	1.395 1.385	35.43 35.18	1.35 1.325	33.91 33.66

JAM-NUT RECEPTACLE WITH ACCESSORY THREADS

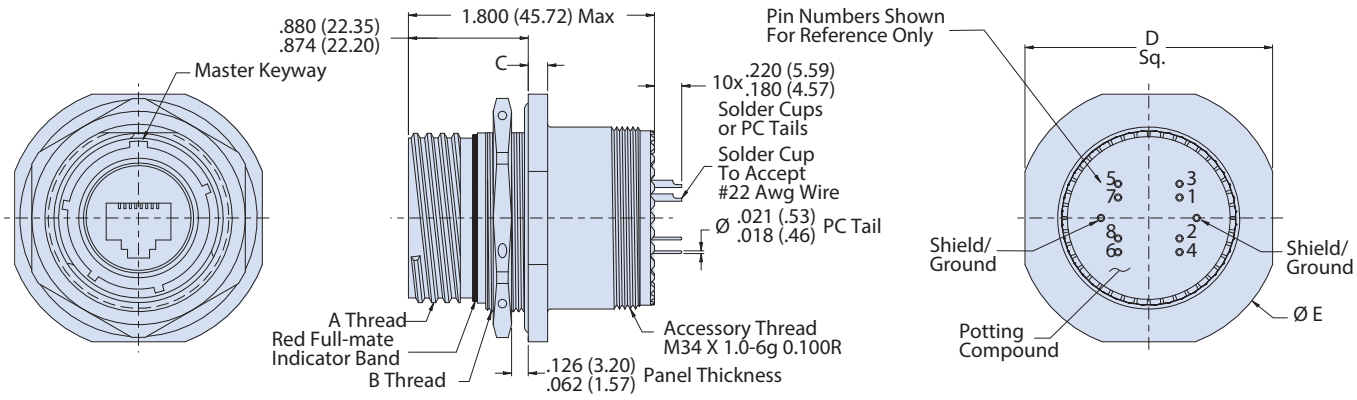

© 2016 Glenair, Inc • 1211 Air Way, Glendale, CA 91201 • 818-247-6000 • www.glenair.com • U.S. CAGE code 06324 • SuperSeal™ Catalog
Dimensions in Inches (millimeters) are subject to change without notice.