M29504/04 TYPE, STYLE 1 PIN TERMINUS FOR MIL-DTL-38999 SERIES III

Part Number	Fiber Size Core/Cladding/Coating (Microns)	Ø A (Microns)	Ref. M29504/04-XXXX
181-002-125	9/125 (Singlemode)	125.5	M29504/04-4208
181-002-126S	9/125 (Singlemode)	126.0	M29504/04-4209
181-002-126	50/125 & 62.5/125	126.0	M29504/04-4210
181-002-127	50/125 & 62.5/125	127.0	M29504/04-4040
181-002-142	100/140	142.0	M29504/04-4043
181-002-144	100/140	144.0	N/A
181-002-145	100/140	145.0	M29504/04-4044
181-002-156	62.5/125/155 (Polyimide)	156.0	M29504/04-4211
181-002-157	62.5/125/155 (Polyimide)	157.0	M29504/04-4212
181-002-173	100/140/172 (Polyimide)	173.0	M29504/04-4087
181-002-175	100/140/172 (Polyimide)	175.0	M29504/04-4213
181-002-231	200/230	231.0	N/A
181-002-236	200/230	236.0	N/A
181-002-286	200/280	286.0	N/A
181-002-448	400/440	448.0	N/A
181-002-533	486/500	533.0	N/A

Consult factory for additional sizes and QPL status

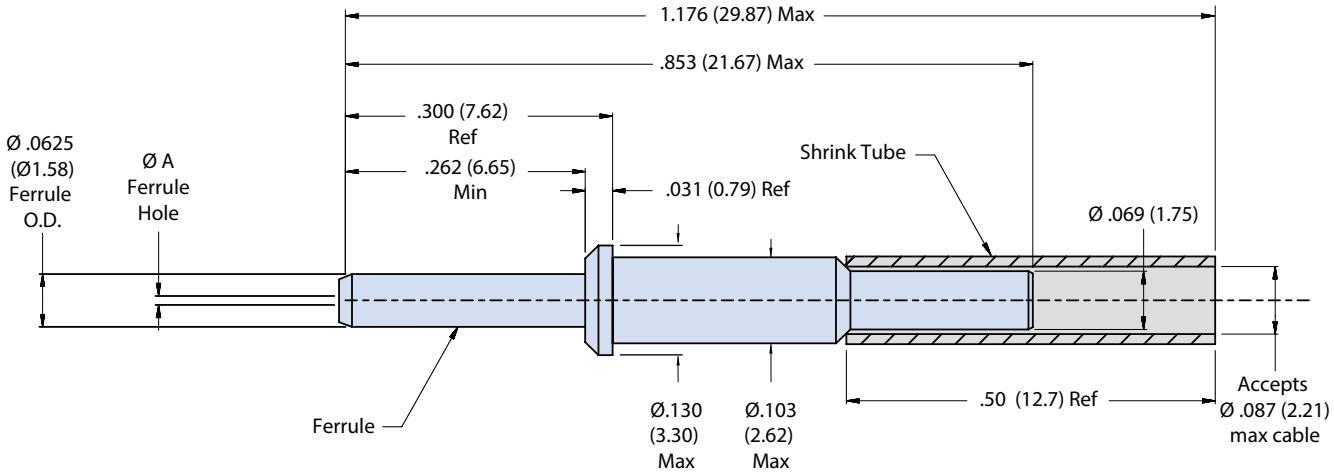

NOTES

1. See Glenair assembly procedure GAP-015 for termination instructions.
2. Insertion/extraction tool: M81969/14-03
3. For ferrule dust cap use P/N 187-019
4. Hand polishing tool: 182-001P or 182-001PW
5. Material/finish
   - Ferrule: zirconia ceramic
   - Terminus assembly: stainless steel/passivate
   - Shrink tube: kynar

© 2022 Glenair, Inc • 1211 Air Way, Glendale, CA 91201 • 818-247-6000 • www.glenair.com • U.S. CAGE code 06324 • SuperNine® Catalog
Dimensions in Inches (millimeters) are subject to change without notice.