Straddle Mount Card-Edge Connector
MWEB-128S

MWEB-128S Straddle Mount Cardedge Connector

Part Number MWEB2L-128S4BS3

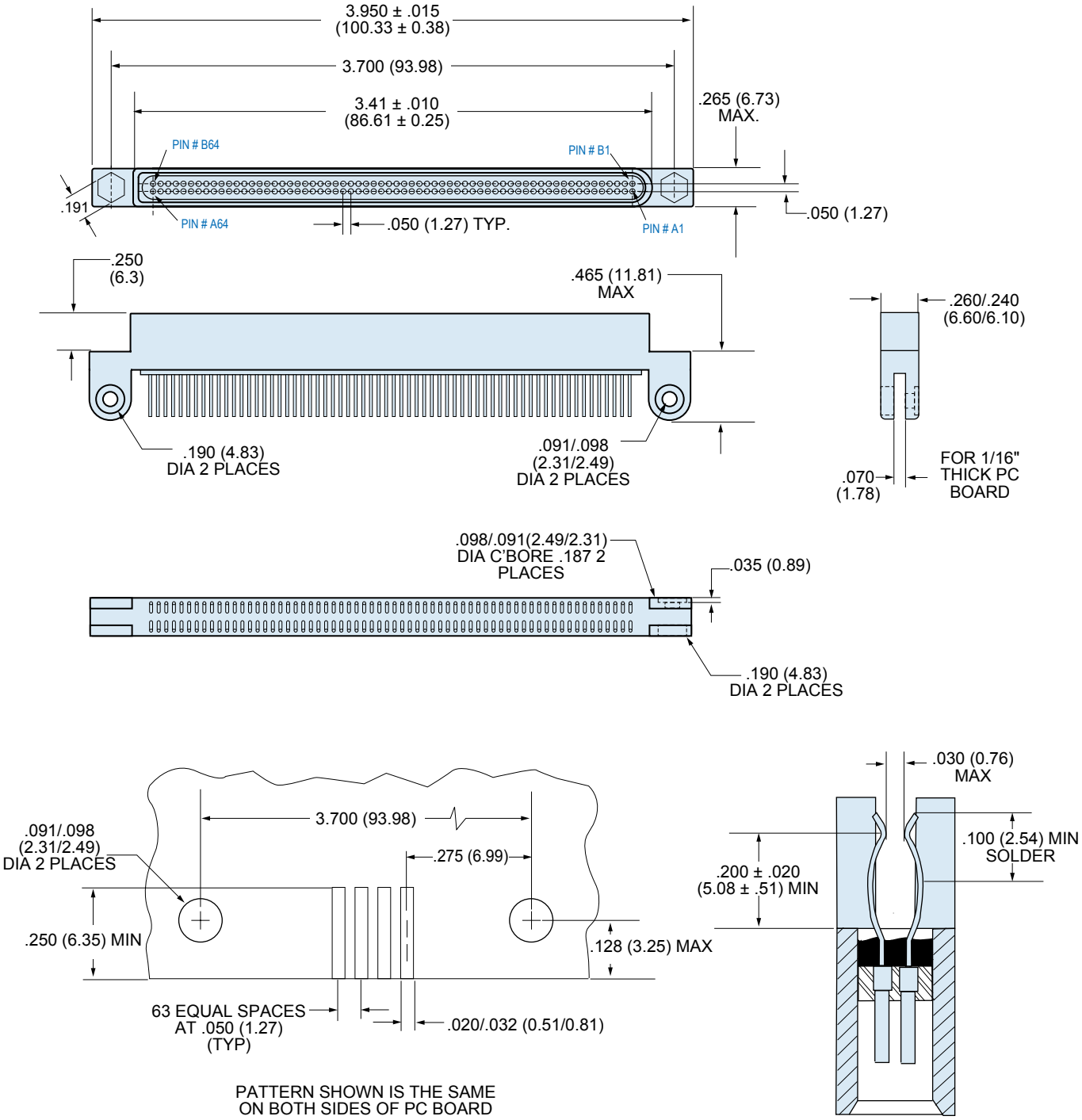

© 2013 Glenair, Inc.

GLENAIR, INC. • 1211 AIR WAY • GLENDALE, CA 91201-2497 • 818-247-6000 • FAX 818-500-9912
www.glenair.com E-Mail: sales@glenair.com