IPT 3181-N and IPT 3181-NF
Protective Jam Nut Receptacle Covers

MIL-DTL-26482 Serie I Accessory

Lanyard Style
N - Chain
NF - Nylon Cord

IPT **3181-10** **N** **F11**

Basic Part Number and Shell Size

Finish Options
See Table II

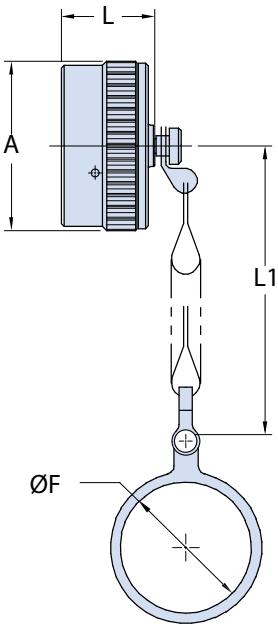

Example: IPT3181-18N
(Stainless Steel Chain)

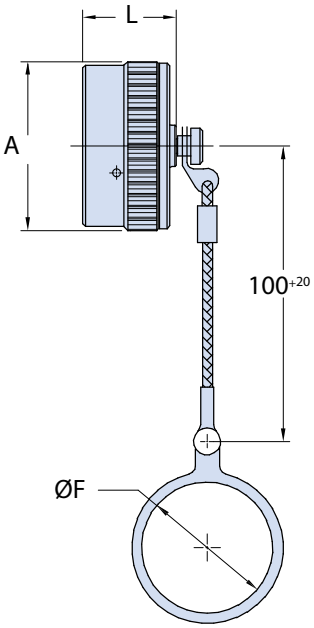

Example: IPT3181-18NF
(Nylon Cord)

TABLE I: DIMENSIONS

GLENAIR P/N	Shell size	A Max.	ØF +0.2 -0.1	L +0.25 -0	L1 ±3
IPT3181- 8N	8	17.95	14.70	14.30	76.2
IPT3181-10N	10	21.05	17.85	14.30	76.2
IPT3181-12N	12	25.40	22.65	14.30	88.9
IPT3181-14N	14	28.65	25.80	14.30	88.9
IPT3181-16N	16	31.90	29.00	14.30	88.9
IPT3181-18N	18	35.00	32.15	14.30	88.9
IPT3181-20N	20	38.00	35.35	14.30	101.6
IPT3181-22N	22	41.25	38.50	14.30	101.6
IPT3181-24N	24	44.40	41.00	15.55	101.6

Application Notes

Metal protective cover for jam nut receptacle connectors with stainless steel chain or nylon cord.

TABLE II: MODIFICATION CODES

Shell Finish (Omit for Standard Cad/Olive Drab Finish)
F6 - Black Electrodeposited Paint (RoHs)
F7 - Black Zinc Nickel (RoHs)
F11 - Electroless Nickel (RoHs)
MB - Marine Bronze (RoHs)

© 2015 Glenair, Inc. U.S. CAGE Code 06324 Printed in Italy