Series 62 Saddle Clamps

for MIL-DTL-38999 Series III and IV Connectors

620H*011 Saddle Clamp, General Purpose

Spin coupling, general purpose. 620H*012 saddle clamp fits MIL-DTL-38999 Series III and IV connectors. For use with open bundle wiring harnesses and closed bundle (jacketed) harnesses. Aluminum coupling nut and frame, 300 series stainless steel hardware.

Adapter Code H

This accessory fits these connectors:
MIL-DTL-38999 Series III and Series IV

MATERIAL/FINISH

Body, saddles, coupling nut : aluminum
Screws, washers, clinch nuts: stainless steel

PART NUMBER

620HS011 | TZ | 11

Base P/N	**620HS011**	Straight
	620HA011	90°
Material/Finish	**C**	Black Anodize
	M	Electroless Nickel
	MT	Nickel-PTFE
	NF	Olive Drab Cadmium
	ZR	Black Zinc-Nickel
	TZ	Tin-Zinc

Size Code

Shell Size	9	11	13	15	17	19	21	23	25
	A	B	C	D	E	F	G	H	J
Size Code	09	11	13	15	17	19	21	23	25

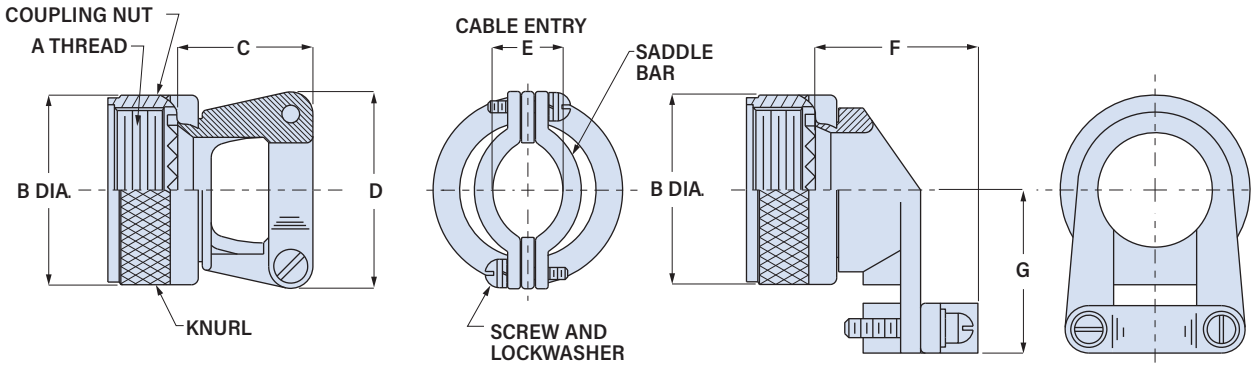

Shell Size	A Thread	øB Max. in	øB Max. mm	C Max in	C Max mm	D Max in	D Max mm	E Cable Entry Closed in	E Cable Entry Closed mm	E Cable Entry Open in	E Cable Entry Open mm	F Max. in	F Max. mm	G Max. in	G Max. mm	Screw Size
9 (A)	M12X1.0-6H	.770	19.6	.88	22.4	.85	21.6	.098	2.5	.234	5.9	.704	17.9	.808	20.5	6-32
11 (B)	M15X1.0-6H	.840	21.3	.88	22.4	.90	22.9	.153	3.9	.234	5.9	.786	20.0	.867	22.0	6-32
13 (C)	M18X1.0-6H	.960	24.4	.98	24.9	1.10	27.9	.190	4.8	.328	8.3	.979	24.9	.929	24.0	6-32
15 (D)	M22X1.0-6H	1.090	27.7	1.03	26.2	1.15	29.2	.260	6.6	.457	11.6	1.039	26.4	.992	25.2	6-32
17 (E)	M25X1.0-6H	1.230	31.2	1.13	28.7	1.30	33.0	.283	7.2	.614	15.6	1.188	30.2	1.056	26.8	6-32
19 (F)	M28X1.0-6H	1.360	34.5	1.38	35.1	1.50	38.1	.325	8.3	.634	16.1	1.300	33.0	1.233	31.3	8-32
21 (G)	M31X1.0-6H	1.480	37.6	1.48	37.6	1.60	40.6	.343	8.7	.698	17.7	1.425	36.2	1.296	32.9	8-32
23 (H)	M34X1.0-6H	1.600	40.6	1.63	41.4	1.70	43.2	.381	9.7	.823	20.9	1.550	39.4	1.358	34.5	8-32
25 (J)	M37X1.0-6H	1.720	43.7	1.73	43.9	1.80	45.7	.418	10.6	.853	21.7	1.675	42.6	1.420	36.1	8-32

© 2022 Glenair, Inc • 1211 Air Way, Glendale, CA 91201 • 818-247-6000 • www.glenair.com • U.S. CAGE code 06324 • Circular Connector Accessories
Dimensions in Inches (millimeters) are subject to change without notice.