MS27477
Jam Nut Mount Hermetic Receptacle
MIL-DTL-38999 Series II

How To Order: *MS*

Shell Style
MS27477 - Jam Nut Mount, Series II

Connector Material / Finish
D - Carbon Steel - Fused Tin Finish
E - Stainless Steel - Passivate Finish
N - Stainless Steel - Nickel Finish

Contact Termination
P - Pin, Solder Cup
X - Pin, Eyelet
C - Pin, PCB Flex Feedthrough
S - Socket, Solder Cup
Z - Socket, Eyelet
D - Socket, PCB Flex Feedthrough

MS27477 Y 10 N 35 P A

Class
Y- Hermetic

Shell Size
8,10,12,14,16,18,20,22,24

Insert Arrangement
MIL-DTL-38999 Series II Hermetic Inserts Per MIL-STD-1560; See Pages B-2 - B-4

Alternate Key Position
A, B, C, D
(Omit for Normal)

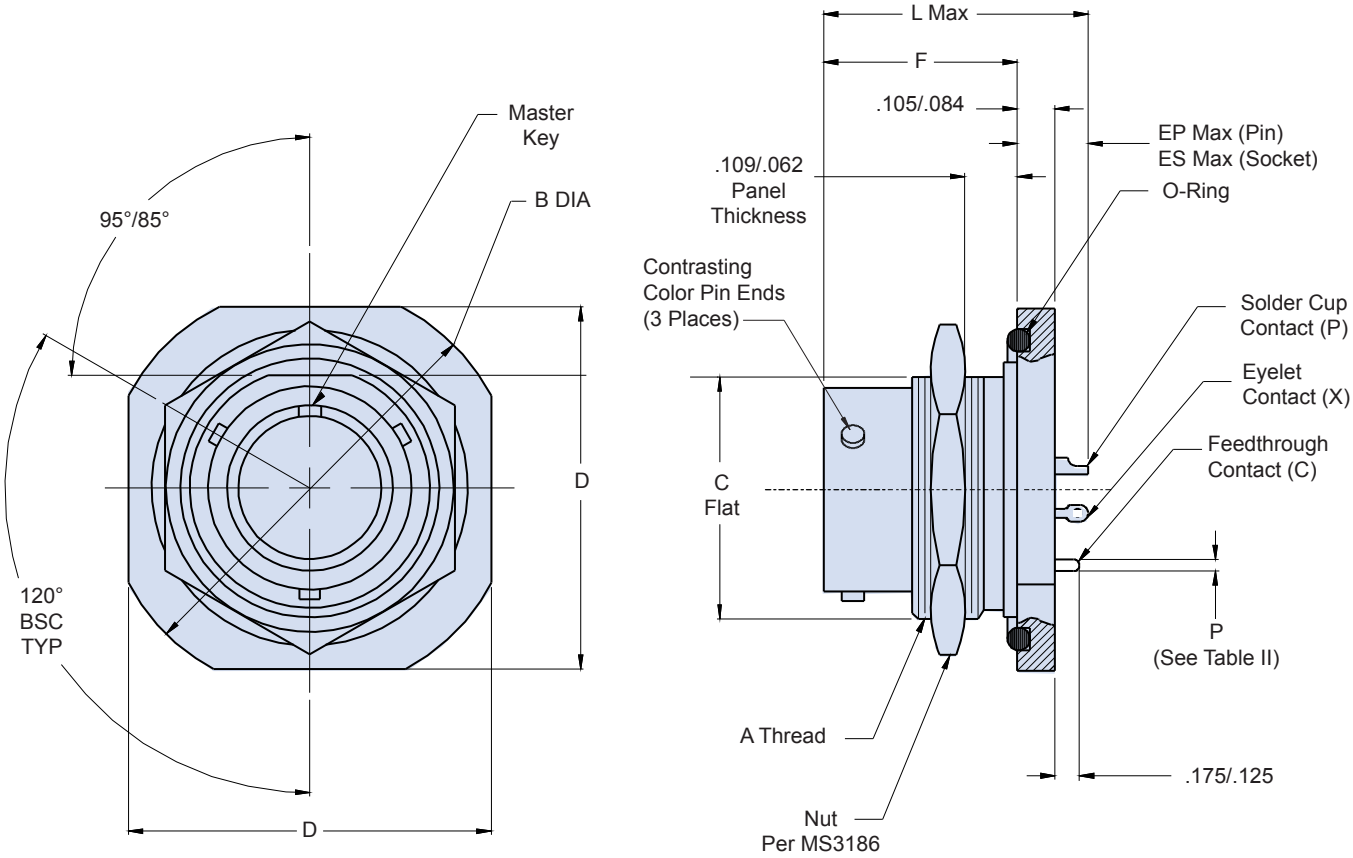

Dimensions in Inches (millimeters) are subject to change without notice.

© 2013 Glenair, Inc.
U.S. CAGE Code 06324
Printed in U.S.A.

232-100-H7
Jam Nut Mount Hermetic Receptacle
MIL-DTL-38999 Series II Type

Glenair®

How To Order: *Commercial*

Connector Series
232-100 - Series II Type Hermetic

Shell Style
H7 - Jam-Nut Mount Receptacle

Shell Size
08,10,12,14,16,18,20,22,24

Contact Termination
P - Pin, Solder Cup *S - Socket, Solder Cup*
X - Pin, Eyelet *Z - Socket, Eyelet*
C - Pin, PCB *D - Socket, PCB*

232 - 100 - H7 Z1 8 - 35 C N

Connector Material / Finish
ZL - CRES, Nickel
Z1 - CRES, Passivated
FT - Carbon Steel, Fused Tin

Insert Arrangement
Per MIL-STD-1560;
See Pages B-2 - B-4

Alternate Key Position
A, B, C, D,
(*N* = Normal)

WIRE ACCOMODATION	
Contact Size	**Wire Guage**
22D	#22 - #28
20	#20 - #24
16	#16 - #20
12	#12 - #14

HERMETIC LEAK RATE MOD CODES	
Designator	**Required Leak Rate**
–585A	1 x 10^{-10} cc Helium per second
–585B	1 x 10^{-9} cc Helium per second
–585C	1 x 10^{-8} cc Helium per second

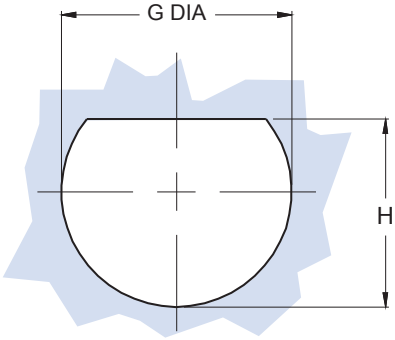

Recommended Panel Cut-Out

TABLE I: CONNECTOR DIMENSIONS

SHELL SIZE	A THREAD CLASS 2A	B DIA ±.016(0.4)	C FLAT ±.004(0.1)	D A/F ±.016(0.4)
8/08	.875-20 UNEF	1.375(34.9)	.815(20.7)	1.25(31.8)
10	1.000-20 UNEF	1.5(38.1)	.939(23.9)	1.375(34.9)
12	1.125-18 UNEF	1.625(41.3)	1.063(27.0)	1.5(38.1)
14	1.250-18 UNEF	1.75(44.5)	1.188(30.2)	1.625(41.3)
16	1.375-18 UNEF	1.938(49.2)	1.318(33.5)	1.781(45.2)
18	1.500-18 UNEF	2.016(51.2)	1.438(36.5)	1.890(48.0)
20	1.625-18 UNEF	2.141(54.4)	1.563(39.7)	2.016(51.2)
22	1.750-18 UNS	2.265(57.5)	1.688(42.9)	2.140(54.4)
24	1.875-16 UN	2.39(60.7)	1.813(46.1)	2.265(57.5)

TABLE I (CONTINUED): CONNECTOR DIMENSIONS

SHELL SIZE	EP MAX	ES MAX	F ±.005(0.1)	G DIA ±.005(0.1)	H ±.005(0.1)	L MAX
8/08	.281 (7.1)	.359 (9.1)	.438(11.1)	.885(22.48)	.830(21.08)	.724(18.4)
10	.281 (7.1)	.359 (9.1)	.438(11.1)	1.010(25.65)	.955(24.26)	.724(18.4)
12	.281 (7.1)	.359 (9.1)	.438(11.1)	1.135(28.83)	1.085(27.56)	.724(18.4)
14	.281 (7.1)	.359 (9.1)	.438(11.1)	1.260(32.01)	1.210(30.73)	.724(18.4)
16	.281 (7.1)	.359 (9.1)	.438(11.1)	1.385(35.18)	1.335(33.91)	.724(18.4)
18	.281 (7.1)	.359 (9.1)	.438(11.1)	1.510(38.35)	1.460(37.08)	.724(18.4)
20	.250 (6.4)	.344 (8.7)	.464(11.8)	1.635(41.53)	1.585(40.26)	.719(18.3)
22	.250 (6.4)	.344 (8.7)	.464(11.8)	1.760(44.70)	1.709(43.42)	.719(18.3)
24	.250 (6.4)	.344 (8.7)	.464(11.8)	1.885(47.88)	1.835(46.61)	.719(18.3)

TABLE II: CONTACT SIZE

PRINTED CIRCUIT TAIL CONFIGURATIONS CONTACT STYLE C AND D

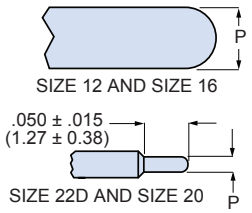

Contact Size	ø P
22D	.011 (0.28) .015 (0.38)
20	.024 (0.61) .028 (0.71)
16	.0635 (1.61) .0615 (1.56)
12	.095 (2.41) .093 (2.36)

Dimensions in Inches (millimeters) are subject to change without notice.

© 2013 Glenair, Inc.
U.S. CAGE Code 06324
Printed in U.S.A.