249-005
EMI/RFI Backshell
for MIcro-D Filter Connectors

EMI/RFI BACKSHELL FOR MICRO-D FILTER CONNECTORS

How To Order					
Sample Part Number	**249-005**	**M**	**25**	**H**	**M**
EMI/RFI Backshell	for Micro-D Filter Connectors				
Finish	**M** = Electroless Nickel **Z2** = Gold Plate				
Shell Size	(See Table I)				
Hardware Option	**B** = Slotted Head **H** = Hex Socket Head				
Band Option	**M** = Micro-Band Included **N** = No Band Supplied				

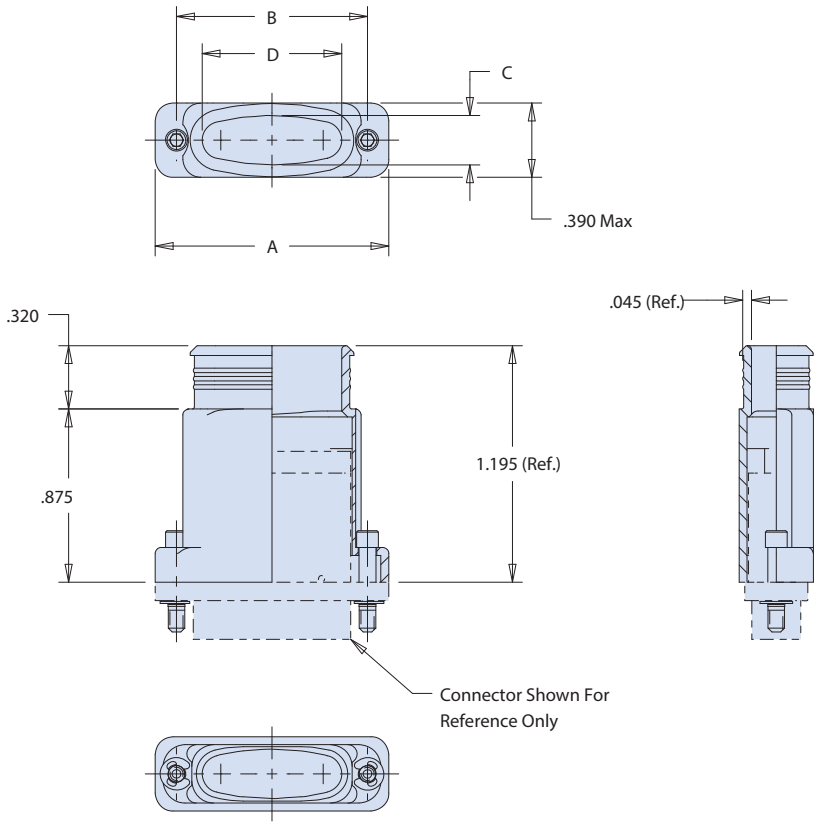

Table I: Shell Size/Dimensions					
Size	**A Max**	**B**	**C**	**D**	**Dia / Sq. In.**
09	0.785 (19.9)	0.565 (14.4)	0.180 (4.6)	0.180 (4.6)	0.171/0.023 (0.6/4.3)
15	0.935 (23.7)	0.715 (18.2)	0.230 (5.8)	0.230 (5.8)	0.216/0.037 (0.9/5.5)
21	1.085 (27.6)	0.865 (22.0)	0.220 (5.6)	0.380 (9.7)	0.257/0.052 (1.3/6.5)
25	1.185 (30.1)	0.965 (24.5)	0.220 (5.6)	0.480 (12.2)	0.276/0.060 (1.5/7.0)
31	1.335 (33.9)	1.115 (28.3)	0.220 (5.6)	0.630 (16.0)	0.306/0.074 (1.9/7.8)
37	1.485 (37.7)	1.265 (32.1)	0.220 (5.6)	0.780 (19.8)	0.367/0.106 (2.7/9.3)

Notes
1. Assembly identified with Glenair's name, P/N and date code, space permitting

Material/Finish
Backshell - Al Alloy
Hardware - 300 Series CRES/Passivated

Dimensions in inches (millimeters) and are subject to change without notice.

© 2013 Glenair, Inc.
U.S. CAGE Code 06324
Printed in U.S.A.